Design ENGINEERING

Canadian COBOTS

Engineering Services Inc.'s collaborative robots help automate the Canadian automotive industry.

PM 40065710

October | 2018

www.design-engineering.com

RENISHAW
apply innovation™

VIONiC™ digital encoder series

Designed for the designer

The VIONiC digital incremental encoder series has been specifically designed with the machine builder in mind. Its enhanced ease of use, superior metrology capability and multiple configuration options all ensure optimal machine performance. VIONiC really has been designed for the designer.

- **The most powerful integrated interpolator chip on the market:** The custom-made, Versatile Interpolation ASIC (VIA) chip outputs digital signals and uses advanced signal processing to reduce encoder error
- **Exceptional point-to-point accuracy:** RELM linear spar scale has an accuracy of <±1 µm/m and a low coefficient of thermal expansion, for temperature-sensitive environments where accuracy is paramount
- **High repeatability:** VIONiC series can directly output digital signals at resolutions as fine as 2.5 nanometres, with no need for an interface
- **Quick and easy to install and calibrate:** No need for additional set-up tools
- **Optional Advanced Diagnostics Tool (ADT):** Remotely calibrates the readhead and performs system diagnosis for in-field servicing or fault-finding

For more information visit www.renishaw.com/vionic

Renishaw (Canada) Limited, Mississauga, ON L5L1C7
T +1 905 828 0104 F +1 905 828 5519 E canada@renishaw.com
www.renishaw.com

Replace your metal bearings...

...in all applications and environments

iglide® Q2: high strength, dirt and corrosion resistant

iglide® A181: FDA compliant, resistant against washdowns

iglide® P: high load capacity, very low moisture absorption

iglide® J: vibration dampening, reliable and long-lasting

Make the switch to iglide®

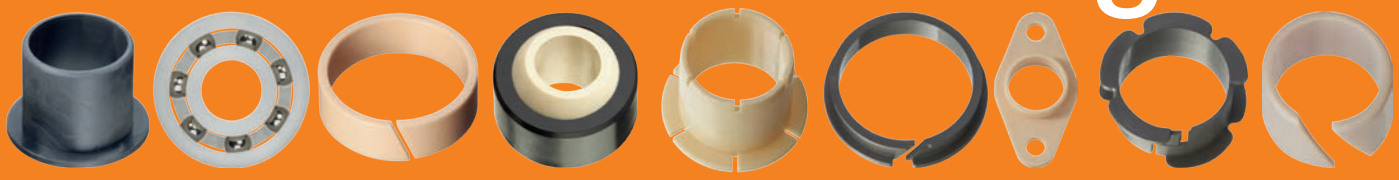

Reduce cost and increase technology with iglide®
• 100% self-lubricating • maintenance free • high strength • wear-resistant • corrosion and moisture resistant • lightweight • More than 40 materials available • lifetime calculator • shipped from stock in 24h • CAD file downloads • online selection tools

igus®
www.igus.com
1.800.521.2747

Request a sample kit: www.igus.com/drytechbox

Columns

Features

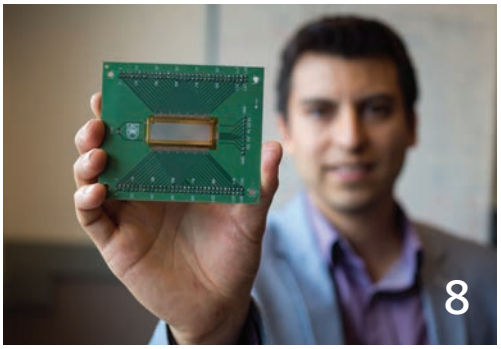

SUBSCRIBER SERVICES

To subscribe, renew your subscription or to change your address or information contact us at 416-445-600 ext.3552.

Annual Subscription Rate
In Canada: $56.50 (1 year), $90.50 (2 year). Outside Canada: $106.00 (1 year)

Single Copy
In Canada: $10.00
Outside Canada: $22.00

Directory Rates
In Canada: $28.00
Outside Canada: $46.00

Design Engineering, established in 1955, is published by Annex Business Media, 6 times per year.
111 Gordon Baker Road, Suite 400, Toronto, ON M2H 3R1

Printed in Canada

O Pioneers

Similar to a game of Russian roulette, finishing first is sometimes a losing strategy, especially when it comes to innovation. Often the companies or individuals who create a market inevitably fall to more nimble, better financed or firmly established, albeit slower, competitors.

Take for example, physicist Joseph Engelberger and self-educated inventor George Devol. In 1959, the pair developed the Unimate #001, the world's first industrial robot prototype, funded by Engelberger's employer, Condec Corp., and its CEO, Norman Schafler. Shortly thereafter, Engelberger established Unimation Inc. and, by 1961, the historic company's patented and meagerly programmable, 2,700-pound hydraulic arm was already at work in General Motors' New Jersey die casting plant.

While the U.S. manufacturing community largely ignored the nascent robot during the 1960s, Unimation licensed it's technology, in 1969, to Europe's Nokia and Kawasaki Heavy Industries of Japan, two large manufacturing markets that eagerly adopted the novel automation machinery. By the beginning of the 1970s, GM and other major U.S. manufacturers had also embraced robotics and Unimation virtually owned the worldwide robotics market.

That dominance, however, wouldn't last as Unimation faced relentless market erosion from European and Japanese competitors during the 1970s. The company also ignored customers' desires, zealously refusing to switch its robots from hydraulics to electric actuation. A decade later, the company found itself deep in debt, out manoeuvred by competitors and ultimately broken by the recession of the early 1980s. While it stuttered on for a few more years, the pioneering company wouldn't see the dawn of the 90s.

Nearly 30 years later, another innovative robotics company seems to have fallen to the same fate. In early October, Rethink Robotics, pioneer of the collaborative robot or cobot, shocked the robotics community when it announced it had shut its doors. Ten years earlier, the Boston-based company introduced the anthropomorphic Baxter robot, complete with two interactively-trainable arms and cartoonish digital eyes intended to communicate its "emotional" state.

The innovative robot became the poster child for a new era of automation in which people and robots could coexist safely and productively in the same space. Established in 2008 by MIT professor and iRobot cofounder Rodney Brooks, the company managed to cement the cobot concept as more than a futuristic fad. Other companies, principally Universal Robotics, and more established robotics firms (e.g. Kuka, Fanuc, ABB, Yaskawa, etc.) followed Rethink's lead.

Ultimately, competition from those larger firms left Rethink vulnerable. When a sizable deal with a Chinese distributor fell through earlier this year, the company was left with too many customized, unwanted robots and too much debt to continue. A last ditch effort to sell the company failed to save it.

It would be easy to take Rethink's sudden closure as indication that cobots are more hype than substance yet all other indicators say otherwise. Universal Robots, for example, recently celebrated the sale of its 25,000th cobot and analysts unanimously foresee the market growing at a staggering pace in the next five years. While Rethink won't benefit from that coming boon, its foresight and intellectual property will seed it. Not all pioneers survive, but their sacrifice is a pivotal part of the journey.

Mike McLeod

@ I enjoy hearing from you so please contact me at MMcLeod@design-engineering.com and your letter could be published in an upcoming issue.

Design ENGINEERING

www.design-engineering.com

Publisher
Alan Macpherson (416) 510-6756
amacpherson@design-engineering.com

Editor
Michael McLeod (416) 442-5600 ext. 3231
mmcleod@design-engineering.com

Assistant Editor
Devin Jones (416) 510-5233
djones@design-engineering.com

Account Manager
Ron Salmon **(416)** (905) 713-4362
rsalmon@design-engineering.com

Art Director
Elena Novinskiy (416) 510-6809

Account Coordinator
Cheryl Fisher (416) 510-5194
cfisher@annexbusinessmedia.com

Circulation Manager
Beata Olechnowicz (416) 442-5600 ext. 3543
bolechnowicz@annexbusinessmedia.com

Vice President/Executive Publisher
Tim Dimopoulos
tdimopoulos@annexbusinessmedia.com

President & CEO
Mike Fredericks

Design Engineering, established in 1955, is published by Annex Business Media, 6 times per year except for occasional combined, expanded or premium issues, which count as two subscription issues.
Printed in Canada
Publications Mail Agreement #40065710
ISSN: 0011-9342 (Print), 1929-6452 (Online)

Subscriber Services: Canada: $56.50 for 1 year; $106.00 for 2 years; $10 for single copy.
Outside Canada: $113.50 for 1 year; $22 for single copy.
Directory/buyer's guide: Canada $28; Outside Canada $46.
Add applicable taxes to Canadian rates.

Circulation
email: blao@annexbusinessmedia.com
Tel: 416-442-5600 ext. 3552
Fax: 416-510-6875 or 416-442-2191
Mail: 111 Gordon Baker Rd., Suite 400, Toronto ON M2H 3R1
From time to time we make our subscription list available to select companies and organizations whose product or service may interest you. If you prefer not to receive this information, please contact our circulation department in any of the four ways listed above.

Annex Privacy Officer:
privacy@annexbusinessmedia.com
Tel: 800-668-2374

Funded by the Government of Canada | Financé par le gouvernement du Canada | Canada

Alliance for Audited Media | ABC COMPLIANCE | ANNEX BUSINESS MEDIA | Magazines Canada

Gear-Up for Savings

with affordable power transmission components!

IronHorse® Worm Gearboxes

Worm gearboxes are built to withstand the toughest applications while delivering reliable speed reduction and increased torque output. Cast iron models are available in right hand, **NEW!** left hand, dual shaft, and hollow shafts variants. Aluminum frame models have hollow shafts.

Helical Gearboxes

IronHorse® inline helical gearboxes provide smooth and quiet operation while delivering high power transfer. Cost-effective alternatives to SEW Eurodrive and/or Nord brands.

- 5 frame sizes, with 7 gear ratios
- NEMA C-face mounting
- Sized to handle from 1 to 20 hp
- Helical gearboxes start at $360.00

Precision Gearboxes

If it is precision you need, our SureGear family of precision gearboxes is an excellent solution. They are available in a wide range of ratios and styles, and provide high-precision motion control at an incredible price.

- Servomotor gearboxes start at $398.00
- Small NEMA motor gearboxes start at $255.00

Timing Belts, Pulleys, and Couplings

Our SureMotion line of timing belts, pulleys, and couplings provide dependable speed and torque transfer without unwanted slippage or speed variation.

- Timing pulleys start at $6.00
- Timing belts start at $2.00
- Couplings start at $10.50

Research, price, buy at: ***www.automationdirect.com/power-transmission***

Orders over $49 get FAST FREE SHIPPING

Our shipping policies make it easier than ever to order direct from the U.S.!

Fast free standard shipping* is available for most orders over $49 U.S., and that includes the brokerage fees (when using an AutomationDirect nominated broker). Using our choice of carrier, we can reach most Canadian destinations within 2 to 3 days. Order by 6pm ET and in-stock orders ship the same day!

*2-day free shipping does not apply to drop-ships, or orders requiring LTL transport, but those shipments can take advantage of our negotiated super-low flat rates (based on weight) that include brokerage fees.

See Web site for details and restrictions at:
www.automationdirect.com/canada

To see all products and prices, visit www.automationdirect.com

All prices shown are U.S. Dollars

Order Today, Ships Today!

VOTED Best in SERVICE 15 YEARS

AUTOMATIONDIRECT.com
1-800-633-0405 the #1 value in automation

UBC's $100 ultrasound sensor heralds cheap, wearable diagnostic device

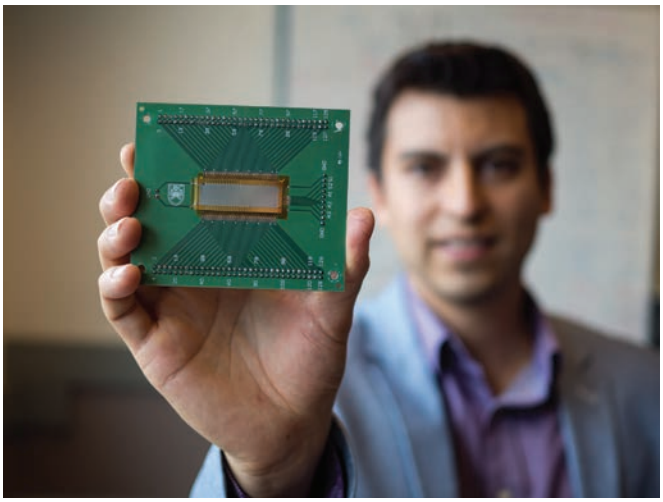

UBC PhD candidate Carlos Gerardo holding a polyCMUT transducer that promises to usher in cheap and portable ultrasound imaging devices.

Engineers at the University of British Columbia (UBC) have developed an ultrasound transducer they say costs a fraction of traditional probes but is also portable and can be powered by a smartphone.

As the most widely used medical imaging technologies, ultrasound creates sonogram images by emitting high-frequency sound waves. The echoes that bounce back are detected by the transducer to form sonograms – a real-time view of internal soft tissues and organs.

"Transducer drums have typically been made out of rigid silicon materials that require costly, environment-controlled manufacturing processes, and this has hampered their use in ultrasound," said Carlos Gerardo, a PhD candidate in electrical and computer engineering at UBC and the lead author of the study paper detailing the transducer's design. "By using polymer resin, we were able to produce polyCMUTs in fewer fabrication steps, using a minimum amount of equipment, resulting in significant cost savings."

While CMUTs (capacitive micromachined ultrasound transducers) aren't new and provide superior bandwidth and sensitivity, they typically do have limitations, the researchers say, in that they can be susceptible to acoustic crosstalk and limited tissue penetration depth.

However, by employing photopolymer materials and a simplified manufacturing technique, the UBC engineers say their polyCMUT prototype eliminates these problems and cost only $100 to manufacture. In addition, the sonograms produced by their device are as sharp as or even more detailed than those produced by traditional piezoelectric transducers.

"Since our transducer needs just 10 volts to operate, it can be powered by a smartphone, making it suitable for use in remote or low-power locations," said co-author Edmond Cretu, UBC professor of electrical and computer engineering. "And unlike rigid ultrasound probes, our transducer has the potential to be built into a flexible material that can be wrapped around the body for easier scanning and more detailed views–without dramatically increasing costs."

Co-author Robert Rohling, also a UBC professor of electrical and computer engineering, said the next step in the research is to develop a wide range of prototypes and eventually test their device in clinical applications.

"You could miniaturize these transducers and use them to look inside your arteries and veins," said Rohling. "You could stick them on your chest and do live continuous monitoring of your heart in your daily life. It opens up so many different possibilities.

www.ece.ubc.ca

Concordia University names engineering department after alum, Gina Cody

Three decades after she graduated from Concordia University in 1989 with a PhD in building engineering (being the first woman at Concordia to do so), Gina Parvaneh Cody will have a building named after her: The Gina Cody School of Engineering and Computer Science. The building title is in recognition of her $15 million donation to Concordia University and is the first engineering faculty building in Canada to be named after a woman.

"I arrived in Canada as a young student from Iran in 1979 with $2,000," she says. "Concordia welcomed me and provided me with support that changed my life. My gift to the university is for the next generation, so that more people can succeed like I did."

Cody's donation will not only support graduate and undergraduate scholarships, but also allows the university to create three new chairs of study in data analytics and artificial intelligence; IIoT/Industry 4.0; and advanced manufacturing. Part of her gift, which Concordia will match, will go towards a special fund for equity, diversity and inclusion programming.

By lending her first and last name to the faculty of engineering and computer science, Cody hopes to break down the barriers that may prevent women from pursuing a career in engineering. Nationally, according to Engineers of Canada, only 20 percent of university engineering students are women. Statistics Canada reports only 12.8 percent of working engineers are women.

www.concordia.com

"Floating backpack" lessens the load for daily commuters

University of Pennsylvania biology professor Dr. Lawerence Rome introduced the HoverGlide: A backpack that reduces perceived weight through a patented frame and series of pulleys.

Rome was approached by the Office of Naval Research (ONR) to figure out a way to reduce the large loads Special Operation Forces carry. His solution was the military-grade Lightning Pack and later the consumer-grade ergonomic-focused HoverGlide line of products. Both are based on what he calls Suspended Load Technology (SLT).

"As you walk or run, your torso moves up and down with each step," Rome explains. "This means you have to decelerate and accelerate the load in your pack ever time your foot hits the ground. The peak vertical force exerted by the backpack during running is three times the weight of your backpack. For a 50lb-load, that's 150lbs. Our packs keep the load at a constant height and no long needs to decelerate and accelerate. We reduce this extra accelerative force by 82 to 86 percent making it more comfortable and less injurious to carry a load."

The HoverGlide's patented technology works off of a two-frame system with an elastic cable between them. One frame contains the hipbelt and harness, which attaches to you like a normal backpack. The bag is attached to the second frame, which is attached to the first frame by a long elastic coupling. As you walk, and the frame moves up and down, the elastic cord gets stretched and shortens in such a way that the frame with the bag attached stays at a constant height.

The HoverGlide currently comes in four different versions aimed at different functions. The Trekker is intended for multi-day hikes and a smaller version is for day hikes. The company offers a tactical pack for first responders and a commuter model for city use.

According to Rome, the idea for the Lighting Pack came after the ONR asked if there was a way to get rid of the extra 20lbs. soldiers were carrying in batteries, by generating electricity from their movement. During that initial phone call, Rome had the idea of creating a pack that would take advantage of the soldiers' movement.

"We recognized that the vertical movement of a heavy load in the gravitational field during walking represents an untapped source of mechanical energy and a potential opportunity to generate substantial levels of electricity," writes Rome in a paper published in *Science Magazine*. "If one is carrying weight in a backpack, because it is fixed to the body, it has to go up and down the same vertical distance. A considerable amount of mechanical energy must be transferred (or generated de novo by the muscles) if the load is heavy. In the case of a 36-kg load, 18 joules of mechanical energy transfer (or work) accompanies each step (assuming 5cm displacement). At two steps, this is equivalent to 35W."

According to the specifications page on the Lighting Packs website, the military-focused rucksack can generate 20-35 watts of power while "hump walking," and 25-50 watts while "hand pumping."

www.lightningpacks.com

NTN celebrates 50 years in Canada

For its 50th year of operations in Canada, and 100 years since its founding, bearing manufacturer NTN commanded an impressive speaker list to its celebration in downtown Toronto's Omni King Edward Hotel ballroom.

Legendary former Mississauga mayor, Hazel McCallion, displayed her still considerable political pull by coaxing Prime Minister Justin Trudeau to the event. NTN was one of the first major international corporations to locate in the nascent southern Ontario region and remains a significant employer for the city.

"NTN is a leading example of a long standing Japanese manufacturer in Mississauga that continues to introduce new innovative products to Canada," said Ms. McCallion. "The 100th anniversary of NTN's founding is a tremendous milestone achieved in the competitive world of global business."

As the world's third largest bearing manufacturer, NTN has over 68 plants worldwide. NTN Canada was established in 1968 to support local sales and manufacturing of NTN bearings in the Canadian market.

www.ntn.ca

Canadian Astronaut scheduled for lift-off for robotics-based maintenance

Canadian astronaut David Saint-Jacques took part in a press-conference recently, in conjunction with the announcement of his upcoming mission to the International Space Station (ISS) on December 19.

The focus of Saint-Jacques' trip will be on science experiments and helping maintain the Station during their mission through the use of various robotic technologies. Canadian space robots play an essential role on the ISS, keeping it running by replacing parts like cameras, computers, batteries and switches. Canadarm2 and Dextre now catch and unload more and more cargo ships delivering supplies to astronauts, as space becomes more accessible. They even repair themselves in space.

Canadian astronaut David Saint-Jacques.

"I have been training hard for this mission for many years now, and in a way I have been preparing for it all my life. Only a few more months, and I will be up there, following in the footsteps of the great Canadians who have flown to space before me," Saint-Jacques said. "To live such an extraordinary adventure is a rare privilege, and promises to be a powerful, humbling experience. I'll be ready, and I can't wait!"

Saint-Jacques mission will run from December 2018 to June 2019 making this the longest Canadian mission to date. As an accomplished engineer, astrophysicist and medical doctor, he'll test an instrument known as a bio-analyzer, which will perform near real-time analysis of blood.

Additionally, Saint-Jacques will be running two other experiments that will investigate and monitor astronauts' immune systems over long-duration missions and study the impact of weightlessness, nutrition, physical activity and radiation on the cardiovascular system and the onset of insulin resistance in orbit.

www.asc-csa.gc.ca

Beckhoff Automation opens Quebec office

Beckhoff Automation has opened an office in Laval, Quebec in an effort to increase its direct sales and support presence in Canada. As the second Beckhoff Automation office in Canada, the 2,223-square-foot facility is located within driving distance of downtown Montreal and Montréal–Pierre Elliott Trudeau International Airport. As the regional sales manager for Quebec and eastern Canada, Ted Sarazin will lead the day-to-day operations at the Laval facilities.

On top of increasing regional customer support, the Beckhoff facility will offer a collaborative space for Beckhoff employees and customers to work on and develop automation and control projects. The space will also provide a training area where customers can become more acquainted with Beckhoff PC-based control solutions, while also learning about a variety of hot industry topics such as IIoT connectivity. Beckhoff maintains its Canadian headquarters in Mississauga, Ontario.

www.beckhoff.com

Q&A with Onshape

CEO Jon Hirschtick discusses the browser-based MCAD's internal workings, design philosophy and future plans.

By Ralph Grabowski

Six years ago, two former CEOs of Solidworks launched a new stealth software company. They landed $9 million in initial funding on the strength of their experience. In the coming year, funding grew to $168 million. Bolstered by that sizable nest egg, the ex-CEOs and other co-founders spent the next three years building a modern CAD system.

The result was Onshape, an MCAD program that runs on the Internet. Since it's debut, the browser-based design application has gained in capabilities and customers, although the company won't say how many. At some point, investors will want their $168 million back, with significant growth. To learn where Onshape is at, I spoke with CEO Jon Hirschtick.

Q: Onshape describes itself as "a full data management platform with CAD built in." Was data management the goal right from the beginning?

Hirschtick: Yes, the original beta already had version control, and we quickly added data management. Data management is the core of our system. We implemented it even before we wrote commands for lofts or drawing generation.

Data is a key aspect of the performance you experience when running Onshape in a Web browser. We store the 3D models in a database, not in files. When you edit the model, the edits are recorded as transactions to the database (Figure 1).

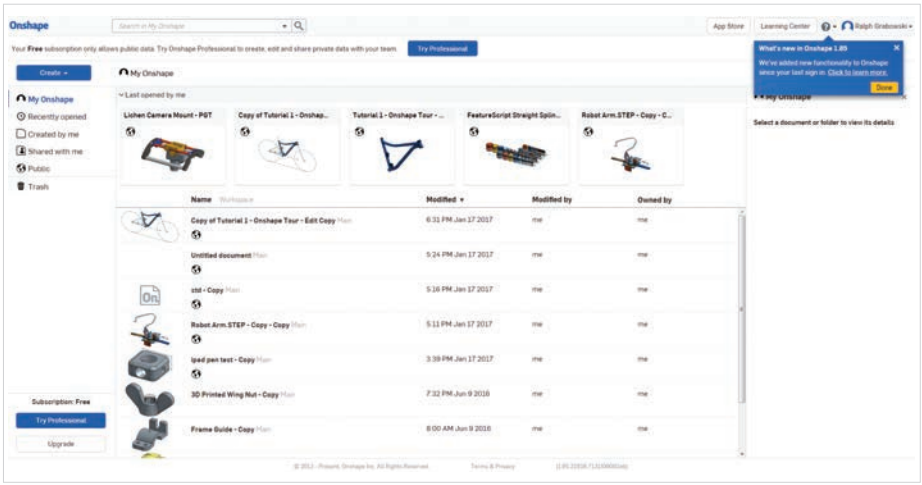

Figure 1: All "files" are stored as records in a central database maintained by Onshape.

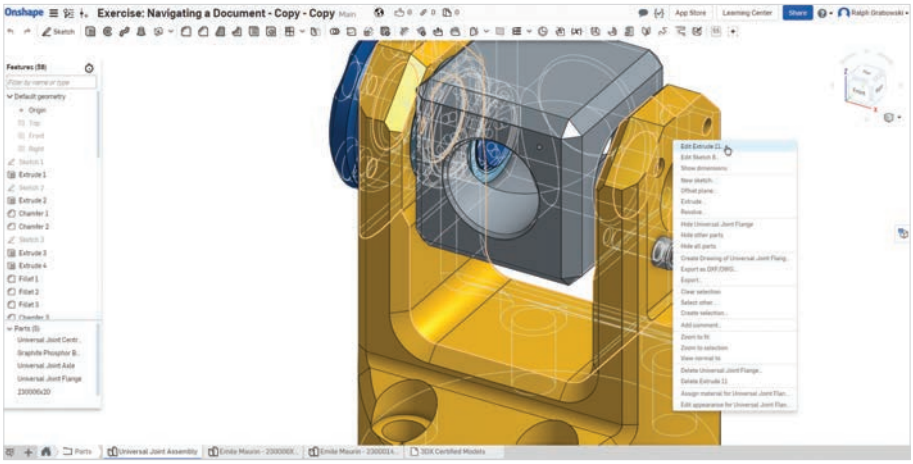

Figure 2: Onshape displaying a shaded 3D model a Web browser.

Q: For the end user, how does working with a database differ from working with files?

Hirschtick: The database provides users with many advantages: There is no need to lock out files, or even lock out a portion of the drawing that you want to work on. There is no need to copy files to local computers before working on them. As far as I know, Onshape is the only system that has a history log of every edit (transaction) made, in addition to maintaining a version log.

Relationships between assemblies and parts are just relationships in the database; there is no need to hunt down a C:\filename to locate missing parts, because parts can't go missing. You and everyone else just work on the model, no matter where you're located.

[**Author's note:** Using a database is not unique to Onshape; Dassault Systemes already had a similar system for its V6-series of software running on its Enovia database.

It also has disadvantages. As discrete files do not exist, third parties cannot easily translate models to formats used by competitors; they must rely on Onshape to provide access to export facilities.]

Q: Onshape is known for its frequent updates, but some design firms want stable CAD environments for long-term projects. How does Onshape enable this?

Hirschtick: [We don't.] Everyone is on the same version, and that makes tech support easy. We upgrade so often that the changes are small and barely noticeable, like Google Maps being updated incrementally.

Everyone in the world is updated at the same time. We have a high-quality upgrade process, unlike the legacy [CAD] guys. We know when people have problems, because we run the servers. Our support people are able to view the problem model with the customer, edit the history and can even fix the model using a [revision] branch.

How Onshape is Different

A browser-based MCAD program needs a server computer to perform CAD calculations for many users at the same time; fast-enough Internet pipes to deliver data without much delay (latency); and a Web browser with sufficient programming chops to handle real-time 3D shading and user interactions (Figure 2).

As you edit a model in the Web browser, the code sends instructions back to the server, which performs modeling tasks, such as adding a fillet to an edge. The results of the calculation are returned to the Web browser and displayed as an updated model.

Onshape programmers employ tricks to give the illusion of reasonable response times, although some actions, like the initial loading of models, are comparable to those of desktop computers.

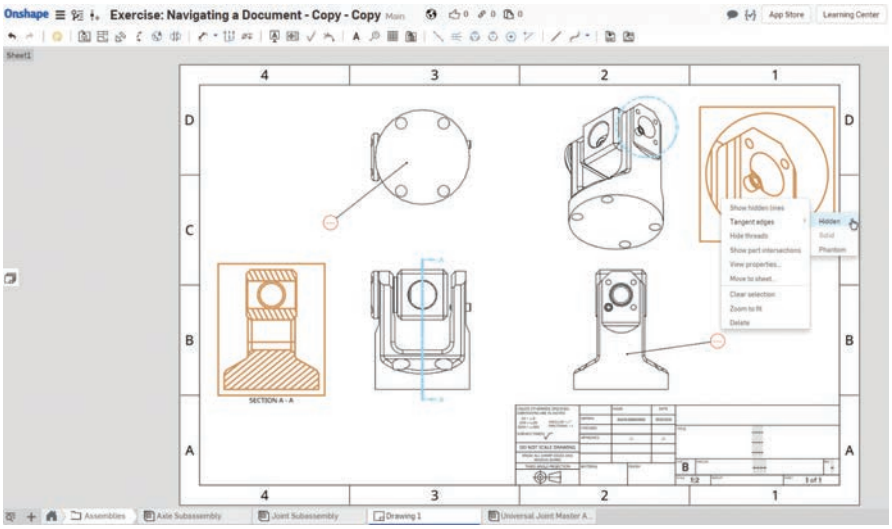

Figure 3: Drawing generation in Onshape, as developed by Graebert.

Q: What are the optimizations you perform to make it seem Onshape is working in real-time?

Hirschtick: We thought a lot before we wrote any code. We knew we wanted a real-time CAD program that ran on phones, on tablets and in browsers; there was to be no installed version.

Here, I have to credit our chief technical officer, Michael Lauer. We don't run Onshape on a single server. Onshape code is broken up into services that run on different servers.

We examined the actions users are most sensitive to, and with five million hours of usage, we have now a pretty good idea of what is important. Some operations are delayed by an acceptable amount; a few milliseconds makes a difference to code running behind the scenes.

We don't load the entire CAD model – just enough or 'what you need to see'. Operations that happen the most in real time, such as rotate, occur in real time with no delay. We send more data to the browser at the right time, such as more details as you zoom in.

Dragging a sketch is done with our secret sauce, something that our competitors tell us they wish they knew how we do it. It is really hard to do smoothly.

So far, we have had zero scheduled downtime, as our system does not need to stop to be updated or maintained.

The Onshape Influence

Just as upstart, SpaceClaim, forced traditional MCAD vendors to take direct editing seriously a decade earlier, Onshape had an immediate impact on cloud-enabled MCAD. Onshape started out with a low price, forcing Autodesk to drop the price of its Fusion application dramatically. In lock step, Onshape raised prices earlier this year and Autodesk shortly followed suit.

Some CAD vendors (like Solidworks) gave up on their browser-based CAD dreams; others had limited abilities (like AutoCAD 360) or ran primarily on the desktop (like Fusion), but then upgraded to better compete with Onshape.

Graebert, which has it's own browser-based CAD system (Kudo) decided to join rather fight; the German CAD software company managed to get its drafting functions incorporated into Onshape, which then accelerated development of Kudo (Figure 3).

Q: Tell me about your work with the Graebert Gmbh and the Open Design Alliance.

Hirschtick: Graebert is a significant partner, as we license technology from them and do joint development. The "in" was our familiarity with them on their work on DraftSight from the Solidworks days. We also work with the Open Design Alliance [such as on revision control].

Onshape Customers

One question that gauges the success of a CAD system is how many paying customers it has? I had asked Mr. Hirschtick the question when I met with him a year earlier, and received a vague response. This year, I asked the question differently.

Q: Who are some of your notable large customers?

Hirschtick: We have many one-seat customers, but we recently landed our first large customer who made a $1-million commitment. There are a handful of customers with hundreds of seats, and an educational customer with a thousand seats for their online class.

Some of our customers don't want to be named, but among our big customers, there is Kichler Lighting, GreenSight Agronomics and Silverside Connectors.

Q: Along with adding CAD capabilities, you are also adding enterprise-friendly functions?

Hirschtick: Oh, yes. And that's one way we land new customers. They know we are always improving the program.

Our enterprise version has even higher levels of control and analytics for corporations. It has functions like approval and pending processes, such as a change needing the approval of three people. But these processes do not stop any editing; even while an approval is pending, users can keep editing the model. We call this non-stop release management.

You can set goals and roles in projects. Permission levels can be set, such as "cannot share with anyone or with specific people." Analytics report which projects worldwide are being edited, which data is accessed the most and "show me by project by person."

We might look the same as other MCAD systems, but our insides are as different from traditional CAD as a cell phone is different from an old rotary phone. Both operate similarly, but are completely different inside.

Conclusion

While its circumstances are unclear, Onshape acts like a company that is successful. It recently raised its prices, which is either a sign of confidence or shows the need for more revenue. It earlier removed the allowance for free users to hold five models privately; they all must be public now, meaning anyone can reuse them. I see this change as another push towards revenues.

A good sign is that Onshape regularly punches out updates, because stalled development would be a warning. But then the company has taken on double the work: To catch up as a CAD system and to develop a data control system. Being a newish company, Onshape has to move fast to catch up with the capabilities of 20- and 30-year old systems like Solidworks and Pro/Engineer. DE

www.onshape.com

Ralph Grabowski writes on the business of CAD on his WorldCAD Access blog (www.worldcadaccess.com) and weekly upFront.eZine newsletter. He has authored many articles and books on AutoCAD, BricsCAD, Visio and other design software.

NO SHORTCUTS

SCOTT Sports relies on Creaform 3D scanning tech to help assure its approach to sport's safety and comfort.

Known for its wide and complete range of quality sports gear, SCOTT Sports has a bit of a peculiar history. The company was founded in Idaho in the north-western USA, back in 1958. It first came to the market with ski poles, followed by goggles, then slowly branching out into biking in the 1980s.

In 1998 came an unusual twist. The company was acquired by what was then its European sales and distribution office, effectively moving the headquarters in Givisiez, a picturesque small town near Fribourg. Moving the headquarters to Switzerland seemed to give a second wind to the company, which greatly expanded its product line from then on. Nowadays, SCOTT Sports develops and produces head-to-toe gear for skiing, biking, motorcrossing, snowmobile riding and trail running. The common thread: All these sports are suited to a mountain, outdoorsy environment.

Pushing the Limits

In the highly competitive sports gear market, what sets SCOTT Sports apart? According to Bertrand Didier, Chief Engineer for the company's Sports Division, it's first and foremost an intense drive to innovate and constantly push the limits of its products.

The company's tagline is "No Shortcuts" – a motto that permeates the company's whole design and development process. To create gear that is perfectly suited to the sport and truly corresponds to its practice, they must constantly rethink all the most important aspects: Security and protection, ergonomics, reliability and, of course, style.

While SCOTT Sports likes to continue playing on and drawing upon its American heritage, it is now a Swiss-based company, with all the efficiency and precision that implies. In Givisiez, there are currently over 20 engineers working for the various sport divisions. Every new product development stems from a collaboration between three teams – product managers, designers and engineers. The latter becomes more and more involved during the project lifecycle, as the technical aspects gradually take center stage.

A Need for 3D

Bertrand first saw a live demo of Creaform products at an industry show and admits he was astonished by the technology – especially by the fact that it "seemed so simple to use while still being very accurate".

At first, SCOTT Sports wasn't sure if its engineering division actually needed a 3D scanner. They had partnered with external services in the past, but could an in-house device really be a useful and sound investment?

So, the company initially decided to make a minimal investment in a "nearly homemade" mini 3D scanner, just as some sort of proof test. After a while, it became clear the company

Equipped by SCHUNK

90% faster gripper change

SWS Quick-change System

Up to **3°** maximum deflection

TCU Tolerance Compensation Unit

NEW: Up to **50%** higher gripping force

PGN-plus-P Universal Gripper

Superior Clamping and Gripping

SCHUNK®

Everything for your Articulating Arm Robot

More than 3,000 components for handling and assembly

schunk.com/equipped-by

could definitely use 3D scanning technology but their mini-scanner wasn't up to the task.

For Bertrand and his team, the HandySCAN 3D was the right choice because it was "so much more intuitive, quick, and comfortable to use" than their test scanner. Furthermore, they were impressed by its resolution and ability to work on any surface or color and the scanner's software made post-scanning work with meshes a cinch.

A Competitive Edge

When asked if the HandySCAN 3D brought SCOTT Sports a competitive edge, Bertrand responded with a resounding affirmative. The whole team uses it and has quickly integrated it into their workflow.

"We like that it's right there, so easy to take out of its box to operate," Bertrand says. "Its availability means we never have to hesitate to measure something, even to obtain a reference or make measurement comparisons."

Case in point: Using Creaform technology when developing the recently launched Symbol 2 ski helmet, "was useful for the flexibility and speed it brought us in the design phase, the comparison between different versions, as well as the product control at the end of the development lifecycle," he adds. "All of this led us to deliver a great product on time, with the shape and fit that everybody expected."

The HandySCAN 3D helps the company's engineering and design teams get the shape and fit that people came to expect from SCOTT Sports products.

Bertrand estimates that using the HandySCAN 3D saved SCOTT Sports at least a few weeks of trial and errors, including the designers and engineers' salaries, plus a few prototypes (which generally cost between 700 and 1,000 euros each).

Since a helmet is a very complex object, one that presents particular challenges in terms of both volumes and ergonomics, it simply wouldn't have been possible to go as far while designing the product without a 3D scanner. This type of product features both safety and comfort (pressure points) issues that could prevent it from reaching a perfect fit. According to the company, the HandySCAN 3D's simplicity contributed to the Symbol 2 success (the helmet won the gold award at the ISPO Award in 2017).

On top of using it in its development process, SCOTT Sports also utilizes their Creaform 3D scanner for reverse engineering and dimensional control as well as to obtain renderings of all their products to keep on file and to provide 3D models to the manufacturers they work with.

Geared toward the future

What are the next steps for SCOTT Sports? 3D technologies such as scanning and printing have opened up new possibilities for the dynamic company. Armed with an extensive industry knowledge — very few companies offer such a broad product line, which enables them to easily transfer knowledge and features from one sport or one equipment piece to another — Didier and his team want to continue improving the products and constantly make them safer, more comfortable more versed in aerodynamics, etc.

Furthermore, they are not afraid to question their own processes and challenge themselves, willing to change direction quickly if need be, all in the name of perfection. Focusing on the details and transitioning the products into a technology realm are two upcoming challenges for SCOTT, and for sure "no shortcuts" will be taken. DE

www.scott-sports.com
www.creaform3d.com

This story was supplied by Creaform.

VISUALLY ENHANCED

Award winning WatVision combines smartphone app with touchscreen and finger ring to enable visually impaired.

By Devin Jones

Every year, the James Dyson Awards recognizes the talents of international design engineering students. Following a round of international competitions within each participating country, the national winners and a few runners-up then vie for the grand prize. In the recent history of the competition, Canada has punched above its weight, taking the top spot twice in the last four years.

This year, two mechatronics students from the University of Waterloo, Craig Loewen and Lior Lustgarten, hope to keep that winning streak going. The pair recently won the Canadian national James Dyson Award for their project WatVision, a smartphone-based application that makes touch screens accessible to the visually impaired. While touch screens have become a near ubiquitous enabling technology for the sighted, the pair realized that its inherent graphic-dependence left the visually impaired at a loss.

"Once we realized how much we used touch screens on a daily basis and how it would not only affect visually impaired people, but the aging population, we knew we could make a large impact on an underdeveloped market," said Lustgarten. "After interviewing members of this community, it was apparent that this was an overlooked problem that needed a solution."

Working with the visually impaired was pivotal in highlighting design challenges the team would not have otherwise discovered, Loewen says.

"We gave the phone to someone who was blind and we said 'just point your phone at the screen,'" he says. "And he did, but the camera wasn't pointed at the screen. It's something that seems so obvious now, but we had no idea because no one on the team lives with the problem."

Their solution is deceptively simple, pairing a smartphone app with a ring worn on the user's finger. The phone's camera maps the edges of the touch screen by locating a simplified version of the QR code system – called ArUco markers – in the screen's corners. Using the ring – which has it's own marker – the user then points to interactive elements on the touch screen.

The app locates the ring marker, relative to the other screen markers, and uses text-to-speech technology to read any on-screen text aloud. The user can then select the correct action and independently use the touch screen service.

Depending how many on-screen markers in the camera's field of vision, the WatVision app can identify if the user needs to realign their phone to the screen. The application will never

confuse the user's finger when pointing at the screen, for example, because from the ring to the screen, everything is identified by the ArUco codes.

If the user is by themselves, WatVision will audibly communicate if it can't accurately connect to the markers on screen, stating that it needs the user to move the phone to the left/right or up/down.

As a more interactively advanced alternative to the ring, WatVision also has a wearable glove with a micro-controller attached. The glove, which has sensors attached and includes a vibration motor, will vibrate subtly when the user has their finger touching an applicable option, letting them know they can interact with what they're touching. Because the project is still in it's prototype stage, the glove does look very tech-y, with wires stemming to and fro. But the team do have plans to streamline the glove and make it look more aesthetically pleasing.

"We created a kind of heat map version, where we looked for all the different text in the image and places where we could do text-to-speech when their finger was over it," says Lustgarten. "And the closer their finger is to an option, the more feedback they get. So when you move your finger around you get a kind of warmer [colder] experience," he says.

The core of the project is giving WatVision a natural feeling design and user-friendly interface for visually impaired people. It's why it took eight months and six iterative software designs for Loewen and Lustgarten to land on a working design for the project. After that, the duo submitted WatVision to MIT under an open source license, allowing access for others to make improvements and upgrades.

One of most compelling aspects of the WatVision system is its price point. Because the ring is made from plastic and smartphones have become ubiquitous, the WatVision team believes they can manufacturer the part for less than $2. Both Lustgarten and Loewen say they could've created a standalone device that utilized similar technology to the Google Glass, but it would have made the device prohibitively expensive, something in direct contrast to their objective.

"It's literally a piece of plastic with a marker on top of it," Loewen says. "We're very confident that it would cost less than two-dollars; that was the goal: To make it very accessible for people. It's also why we hosted the app on the phone, because 80 percent of Canadians have a smartphone. We aren't asking people to buy another $800 device that only works for one thing."

The team is currently working on getting the WatVision to the product stage, aiming to have it on the market in the next year. DE

www.watvision.github.io

Canadian COBOTS

Engineering Services Inc.'s collaborative robots help automate Canadian automotive industry.

By Devin Jones

One of the biggest trends in robotics at the moment is collaboration – man and machine working in the same space, without the need for protective zones or other safety measures. In fact, it's the fastest growing robotics sector, according to industry analysis by ABI Research.

Between 2016 to 2025, the market-foresight advisory firm predicts, global revenue of collaborative robotics shipments will reach a CAGR of 49.8 percent, compared to 12.1 percent for industrial robots and 23.2 percent for commercial robotics. Although the cobot market is still relatively small at present (reaching approximately $292 million last year) that figure is expected to balloon to $1.23 billion in global revenue by 2025.

One Canadian company poised to ride that surge is Toronto's Engineering Services Inc. (ESI). Founded in 1982 by University of Toronto robotics professor, Dr. Andrew Goldfarb, ESI's original vision was to bind research to practical execution. At the time, Dr. Goldfarb acted as a one-man consulting firm while maintaining his teaching position.

Over its 37 year history, ESI pursued multiple robotics sectors and was purchased by SuperRobotics Ltd. in 2015. Today, as an R&D subsidiary of Shenzhen Anzer Intelligent Engineering Co., the bulk of its product line focuses on mobile and consumer robots. ESI's TRACKER III-L Police EOD Robot, for example, leads ESI's explosive ordnance disposal line while the anthropomorphic VCTR and HRR UMEBOTs are intended for telepresence applications.

Boosting Quality

Most recently, however, the Canadian robotics company has ventured into the industrial space, with the unveiling of its C-15 and C-5 collaborative robots. According to Matt Gryniewski, ESI's director of sales and marketing, the industrial cobots will be their most successful line to date.

"This is a market that's growing at a phenomenal rate and it's at a point where people are no longer asking what a cobot is, but are asking how they can implement one into their systems to boost the quality of production," Gryniewski says. "We're ramping up production of the cobots to meet market demands. The other focus is to continue our R&D developments, which includes autonomous navigation of robots. We're using that academic flair to make our products better."

The C-5, the smaller of the two, is designed to work within hazardous industrial environments and aligns with Expib IIBT4 /Exib IIBT4 – two safety compliance methods that categorize this type of machine as "intrinsically safe." From general assembly to handling hazardous materials, the C-5 is equally safe for human collaboration as is its bigger brother, the C-15.

The larger 6-axis C-15 weighs in 100kg and spans a workspace radius of 1,323mm. The cobot can handle a rated payload of up to 15kg, with repeatability of ±0.05mm, and is equipped with sensor fusion technology for impact prevention and contact detection. Safe for human collaboration, the C-15 is meant for labor-intensive assemble lines, precision machining, grinding, polishing, welding and material welding.

Both models feature hand-guiding and floating modes that allow the cobots to be manually "taught" complex tasks without programming expertise. In addition, the cobots are controlled by a multi-core industrial PC that enables hand guiding mode, dynamic and quasi-static contact detection and an optional 3D safety vision system.

Infinitely Repeatable

It's the metalworking capabilities of C-15 that caught the attention of North America's largest auto parts manufacturer, Aurora, ON-based, Magna International. For all it's resources, the manufacturing powerhouse ran into a very human problem when grinding and finishing automotive roof panels. Unavoidably, some workers pressed harder with the grinding tools that left scratches where others didn't. As a consequence, laser metrology checks turned up an unacceptable level of rejects due to inconsistent operator performance.

To correct the problem, Magna chose ESI following an industry analysis and scouting exercise. An introduction at a trade show led to multiple meetings and an eventual partnership. Magna had no history using collaborative robotics and saw this project as a testbed for future work.

"The goal was to use the collaborative robots in an industrial manner so that we could achieve Class A quality," says Aldo Van Gelder, general manager of the Stronach Centre for Innovation. "The panel chosen was a roof and we worked through it step-by-step including the implementation and requirements for force control to develop what is required for a Pathfinder, to give an example."

According to Van Gelder, when Magna introduced ESI's C-15 arm into its production lineup, they saw a 50 percent increase in production due to improved consistency and repeatability. Additionally, implementing the C-15 cobot reduced the work area footprint by 40 percent and doubled their output for finished products. Van Gelder is optimistic about the future use of cobots within Magna's operations, pointing to pick-and-place applications as well as the ability

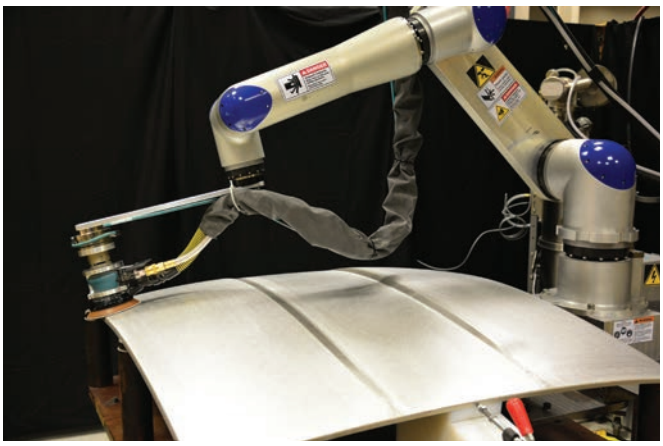

Magna International's pilot project with ESI's C-15 cobot led to a 50% increase in production of automotive roof panels, the company says.

ESI's C-15 and C-5 cobots are controlled by the company's C-Series controller, which lend the cobots hand guidance and impact detection.

to automate machine tending – a tedious and repetitive task for a traditional workforce.

"The reason this development project happened with ESI is because they were open to developing this specific prototype project with us," Van Gelder says. "With many of the other companies, you'd have to do this independently or through an integrator."

According to Gryniewski, both the C-5 and C-15 models are ready to be shipped and implemented onto factory floors, and by the end of the year Gryniewski they should have the cobots in place. Their initial project was successful and both parties are now looking at additional applications the cobots could be useful for.

Beyond the cobots, ESI has other machines currently on the market that are rife with potential given the current autonomous navigation trend in robotics. For example. Gryniewski says ESI is currently working on a form of GPS navigation for in-home robotics that would allow for larger-sized assistance robots. He compares it to a Roomba but with additional functions like carrying trays of food or cleaning large spaces.

"There are a ton of companies working on autonomous cars," Gryniewski says. "This is part of what will bring robots from the industry into the home: It's the ability for the robot to move around by itself. One of the classic examples is the Roomba. We're working on a system that will be able to do that with robots of larger sizes. They'll be able to navigate from the living room to the kitchen and be able to assist you with carrying something behind you." DE

www.esit.com

DATA RICH, *Info Poor*

Toronto's Canvass Analytics strikes it big with Google investment, eyes global partnerships.

By Devin Jones

For Humera Malik, the path to co-founding and launching the Toronto-based Canvass Analytics traces back to 2005 where she worked for Bell telecommunications as an Assistant Director working on the implementation of smart buildings.

"On the telecoms side, where I started, we were adopting a lot the smart solutions and I got to help build smart solutions with things like smart metering," Malik says. "It wasn't exactly on the industrial side, but it was in the smart utilities that I really was able to learn the genesis of the world I've found myself in now."

Focused on industrial implementation of predictive analytics, Canvass made headlines earlier this year with a five-million-dollar investment from Gradient Ventures, Google's A.I. focused subsidiary. Interesting as a success story for Canadian startups, the move was noteworthy since it's the first investment Google has made into the A.I.-driven industrial analytics market.

At it's core, Canvass Analytics tackles the "data rich, information poor," situation many companies find themselves when implementing IIoT solutions. Working primarily with manufacturing companies, Canvass skews away from big data projects that don't lead to actionable results. Instead, it focuses on immediately applicable predictive analytics and scalability.

Canvass applies that speed and scalability by answering three questions about the data clients collect:

1. How can I gain a competitive advantage from this data?
2. How do I meet the growing demands of my market using this data?
3. How do I optimize production so that I'm prepared for the future?

"Who better to partner with than Google, who's actually building the future of A.I.?" Malik asks. "We're really proud to be their first investment into industrial analytics. For us, it's all about where we can extract learning opportunities from. It's also about the people setting these technology standards and creating these platforms. Because these are not solutions; solutions are built by people like us."

Shifting data to streamline automation

On the shop floor, Canvas applies its analytics platform to help achieve certain production line objectives. For example, company's A.I. algorithms can monitor product quality in real time and provide feedback to an operator. If anything falls outside of product parameters set by the operator, the A.I. lets them know before the quality of the product is jeopardized. Using the automotive industry as an example, Canvass is able to use their A.I.-powered analytics platform to predict failures and optimize assets to the tune of a 10 percent reduction in production downtime.

In addition to manufacturing applications, Canvas' platform is also increasing productivity in energy companies. In one case, Canvass Analytics is helping a global agriculture processing plant optimize their co-generation turbines which has led to a 13 percent improvement in fuel efficiency while reducing CO_2 emissions by 10+ million pounds per year.

This speed and scalability of their solutions are two of the reasons Gradient Ventures decided to partner with Canvass Analytics. In part, the system's flexibility is generated through its microstructure architecture—a variant of the service-

oriented architecture—which is lightweight, easy to develop and offers repeatability and consistency. Canvas adopted this strategy over time by asking themselves 'how do we allow our customers to do more with what they already have?'

In a statement released in conjunction with the investment, Gradient Ventures founding partner Ankit Jain said, "Autonomous operation is the holy grail of manufacturing and A.I. is the game-changer that is making it a reality across the industrial landscape. We're backing Canvass Analytics because of its unique approach to implementing A.I. and predictive analytics quickly and in an automated manner, without the need for lengthy and often cost-prohibitive consulting engagements."

Microstructure Architecture 101

Unlike monolithic, or "giant," applications, microstructure architecture is nimble, fast and responsive, Malik says. For example, whenever changes need to be made to a monolith application, it takes time and can be expensive. It means potentially deploying all new software to integrate a few new lines of code, or scaling an entire operation when you just wanted to scale a few specific functions.

Conversely, a microstructure architecture is modular in that each function is individualized and separate from the whole, making it very easy to work with and make changes to. This type of system is useful for times when you can't completely predict the types of devices or functions that one day might be needed to run the application. The small decentralized nature of these systems also allow programmers to revamp and create new solutions quickly.

Of course, it's not a perfect strategy. Testing can become complicated and tedious due to decentralized deployment and the increased number of services can result in information barriers, but it's a strategy growing in popularity. According to Malik, companies often shift to a microstructure architecture as their customer bases grow and demand a more versatile and fast response system.

For example, Amazon, Netflix, Twitter, eBay and Paypal all work off a microstructure system, but this wasn't always the case. They were once slow moving architectures that responded to the growing demands of their consumer base.

Security and the future

With the explosion of IIoT over the last few years, security concerns and proper implementation are on everyone's mind, include Canvass Analytics. They recently announced a partnership with Microsoft's Azure platform, as well as a deal with third-party software security groups to handle things like cross-border data sharing, for example.

"We rely on partners to provide the different layers when it comes to the compliance and security side, because we deal with some of the most sensitive data that you can think of," Malik says. "Some of these things become challenging when you're dealing with an open consumer service. Some people might not care but, for us, the most important thing is our customer data."

The next 18 months for Canvass Analytics will be focused on expansion and further partnership, Malick says. Additionally, the company is thinking global, currently working in Europe and Asia. According to Malick the company is planning to move into "mature and progressive markets where IIoT is being implemented, even at the government level."

On the partnership front, specifics are still under wraps; However, Malik does note that "huge partnerships," with companies who already exist in the industrial space from a back-end, analogue perspective are forthcoming. For Canvass, it's about, "how do we integrate ourselves with them to become this intelligent, industrial analytics platform that enables them to go out and create stickiness in the market." DE

www.Canvass.io

LOCK DOWN

Cyber security experts explain how best to harden IIoT systems.

by Devin Jones

The past few years have seen an explosion of the IIoT/Industry 4.0 movement within engineering circles. News outlets, industry conferences and company meetings have pulled these concepts every which way to discern if, why and how to implement them. But like any shiny new toy, companies can be too eager to jump on the potential of IIoT before fully understanding it.

One concern that continues to stifle uptake of the technology is security. Opening up manufacturing facilities that have traditionally operated in a closed system to the wilds of the Internet raises understandable worries and an abundance of questions.

"The first thing you've got to do is understand what you have at your disposal," says Sean Harris, a regional manager of U.S.-based IIoT software firm, Pixel Velocity. "Until that's done, you can't really do anything about your security."

For industrial cybersecurity companies like Claroty or Nozomi, asset identification is the crucial first step they perform for clients to establish an IIoT security foundation. For example, Harris says, clients often under-estimate how many connected devices live on their network. What seems like 500 turns out to be more than a 1,000 after a routine port scan of the facility network. This situation often results from companies' overeager efforts to expand, connecting systems that haven't been "OK'd," by the IT department.

"By adding more devices and more sensor data to help hit your ROI, you're putting stuff out on the edge at a rate that your network can't keep up with," Harris says. "So you're putting these makeshift wireless networks out on these remote sites as well and you're bypassing your SCADA system for a large part."

For Daniel DesRuisseaux, director of cybersecurity for Schneider Electric, working in phases not only gives customers control over how they implement IIoT solutions, but it adds a layer of control as to how quickly a device network expands.

"You could say, for example, that 'our goal is to enable all of this functionality," he says. "In the first phase, we're only going to go after information from these cells or these locations and we're only going to focus on data for preventive maintenance,'"

"From there, you'd do your analysis and say 'Here are our risks, here's what we should do,'" he adds. "In the future, you would implement phase two: You would increase the scope of the geography or add additional features. It just gives you more control over your expansion

and there's fewer opportunities for mistakes to be made regarding security."

After identifying what's connected to your network, the next logical step is to define end results. Whether it's predictive maintenance through a platform like Canvass Analytics, or automating certain functions on a production line, implementing solutions without understanding your ROI is a recipe for creating security vulnerabilities, IIoT experts say.

For Ben Hope, business development manager for electric automation at Festo Canada, the security conversation should begin early, during the practical application phase. Too often, he says, customers misunderstand the fundamental workings of IIoT and look to implement security through containment.

"The big fortune 500 manufacturers are very concerned with security; often they want to leave the internet and the cloud out of the equation," Hope says. "They're saying they want the benefits of IIoT but they don't want to be on the internet. Of course, we can keep everything contained and off the cloud, but certain services, readily available on the cloud, would be prohibitively time consuming and costly to implement independently within the enterprise."

Given that IIoT, by its nature, requires some connectivity to services outside the enterprise, security through obscurity isn't a viable strategy, says Joe Slowik, adversary hunter for Cybersecurity firm Dragos.

"Short of industries where it is legally required for no connectivity to exist, operators have to assume their network is connected," he says. "Thinking that it is air gapped or isolated is a false assumption. Instead, [companies] should try to orient their defense around recognizing the eventuality of an attack while still allowing IIoT systems to function."

To strike that balance between security and functionality, says Harris, companies need to bring their operation technology (OT) and information technology (IT) together. Unfortunately, collaboration between these two realms hasn't always been harmonious, he says.

"Seven or eight years ago, it could be pretty nasty," Harris says. "[IT and OT] didn't really like each other and neither one wanted the other snooping around in their responsibilities. Now, we've seen a change after events like WannaCry, attacks or disruptions that really do some damage on an operational level. With the rise in popularity of IIoT, they can't afford to be as siloed as they once were."

Even so, Slowik warns that blindly applying IT security measures to an OT environment isn't a workable solution. While IT cybersecurity techniques may be applicable, they require adaptation to function properly.

"It's not so much that OT is different and that IT is not appli-

cable," he says. "The reality is that there's been an IT-ifcation of the OT environment. IT technologies and practises might be applicable, the issue is that a simple copy/paste isn't going to work because it's going to result in operational impacts or operationally limiting results."

Ultimately, IIoT security experts recommend that enterprises adhere to internationally recognized security standards as a best practice approach to harden operations. ANSI/ISA 62443, for example, provides end users and machine designers with procedures for implementing electronically secure automation systems.

"ISA 62443 is a fairly comprehensive standard in that it will say 'Here are seven different areas of security features,'" says Ruisseaux. "If you have a general standard that ratchets up [in levels], I think that's applicable across any industry. The hardening of features and products can be generically done."

On a more granular level, implementing such broad security standards can be complicated but one of ANSI/ISA 62443's strengths, DesRuisseaux says, is the ability to create modular "profiles" that can be tweaked to fit different industries.

"You have the concept of saying 'I'm going to create a special profile where I can look at my 62443 standard, and say that 'I'm going to create my water-waste profile.' The water-waste profile is all of the features in security level one plus these three features in security level two, plus this feature from security level three. And then the oil and gas profile can be different and specific to its needs. This approach gives you a certainly modularity.

Slowik believes the ideal way to implement industry-specific best practises is through professional organizations like ISACA.

"That way, you get the best ways of doing these operations plus examples of how to execute security in these environments," he says. "That also goes for specific companies and niches within industries so that the most relevant models are pushed out." DE

www.pixel-velocity.com
https://dragos.com
www.schneider-electric.ca
www.festo.com

Automation

Delta Robot

igus has introduced a low-cost (US$6,200) robot that provides a simple automation solution for assembly tasks. Provided pre-assembled or as a kit, the robot includes a toothed-belt drive, encoders and stepper motors as well as optional drive controllers. The robot is based on three drylin ZLW toothed-belt actuators, lubrication-free igubal spherical bearings and other lightweight components. NEMA stepper motors and encoders provide handling up to ± 0.5 millimeters. The complete system has an installation space of up to 420mm in diameter and can carry up to five kilograms at low speeds. The unit can reach a maximum pick rate of 60 per minute. The unit weighs 15 kilograms, has a working area diameter of 380mm (at 75mm) and a maximum process force of 100N (at a radius of 0mm).

www.igus.com

Safety Network Controller

Omron Automation Americas has developed its NX-Series safety controller, which features both CIP Safety and Safety over EtherCAT (FSoE), a protocol favored for its high-speed response. CIP Safety enables communication between nodes such as PLCs, I/O blocks, light curtains and interlock switches while allowing safety and standard control devices to reside on a single network. In addition to the hardware, enhancements have been made to the programming and configuration software. Sysmac Studio now offers functions such as automatic programming, safety data logging, online functional test and third-party CIP Safety device connectivity that includes industrial robots.

www.omron247.com

Motor/Drive Combo

Siemens has released combination motor/drive packages so OEMs can order heavy-duty industrial motion control solutions from a single source. The combinations are power-matched for 480V high-overload operation through a 20hp range, with I2T protection from thermal damage. The Siemens Intelligent Operator Panel

(IOP) is included. Application macros are provided in the Sinamics G120C drive and the terminals are pre-assigned and the parameters are automatically set. The SIMOTICS SD100 motors are cast-iron with inverter duty ratings in a 4:1 speed range for constant torque and 20:1 speed range for variable torque. Communications selections include RS485 with USS and Modbus protocols. A Profibus variant is also offered.

www.usa.siemens.com

Industrial Switches

Antaira Technologies announced the expansion of its industrial networking infrastructure family with the introduction of the LNX-0500-M12-67 series. The IP67, Layer 2 switches have been designed specifically for harsh industrial environments. It features redundant power inputs of 12 to 48VDC through an M12 5-pin A-coded male connector. The IP67 rating signifies these switches can withstand large volumes of water and submersion for up to 1 minute. These switches operate between -10° to 70°C in the standard model and -40° to 75°C in the extended temperature model, which allows this device to be used in extreme climates.

www.antaira.com

Machine Vision

GigE Cameras

Teledyne DALSA unveiled its latest Genie Nano cameras with eight monochrome and color models. The industry-first 5-Gigabit GigE Vision cameras feature resolutions from 3.2Mpixels to 12Mpixels and the latest 5GBASE-T link speed. Like all Genie Nano cameras, the latest models are available in multiple resolutions ranging, with frame rates from 190 to 63 fps. The line operates in a temperature range from -20 to 65°C and features PoE or 12-36 Volt support. In addition, the series features 2 inputs/3 outputs opto-coupled on a 10-pin connector; 1, 2.5 and 5 Gigabit Ethernet link speed; and up to 10 Gbps of internal image acquisition.

www.teledynedalsa.com

3D Scan Sensors

LMI Technologies (LMI) announced it will unveil three 3D inspection products in November at the Vision 2018 show in Germany. Designed for small parts inspection, the company's Gocator 2510 and 2520 sensors generate 3D scans down to 8µm x resolution. The Gocator 2500 line handles the complete processing pipeline at inspection rates up to 10kHz. The Gocator 3504 offers 6µm XY resolution capture, combined with +/-0.5µm measurement repeatability. It also features an industrial stereo camera design, point-and-shoot technology and is pre-calibrated. Finally, the GoMax accelerates any Gocator sensor by taking over a portion of the data processing (including point cloud generation, 3D measurement, and PLC/robot communication).

www.lmi3d.com

Barcode Reader

Omron's Microscan division has released three barcode reading and machine vision

technologies: The HAWK MV-4000 smart camera, the MicroHAWK ID-45 reader and HS-360X handheld reader. The HS-360X barcode reader is impact resistant and rated to an IP67 environmental protection category. The HAWK MV-4000 also boasts a rugged casing for its machine vision capabilities that reach near-PC processing speeds. The compact MicroHAWK ID-45 features best-in-class lighting technology for fast barcode decoding of both printed labels as well as direct part marks.
www.omron247.com

Motion Control

PLC Modules

AutomationDirect has added more AC, DC and analog I/O modules to increase the capabilities of its Productivity1000 micro-modular PLC. The P1000 PLC system can be expanded with up to 8 I/O modules for a total of 128 discrete I/O points or 48 analog I/O channels. The added DC P1000 modules include higher density 16- and 15-pt VDC models, and 8- and 16-pt VAC/VDC input versions. In addition, 8-point 120-240VAC I/O modules have been added, as well as analog I/O. This includes RTD 4-channel input and combination 4-channel input, 2-channel output, 0-20mA and 0-10VDC modules. I/O modules are auto-discovered and added/removed using a single latch mechanism. There are no placement restrictions and power budget limitations. QR codes are printed on each module for the latest specifications/wiring diagrams.

www.automationdirect.com

Electronic Actuator

Southco, Inc. has added the AC-EM 10, a sealed version to its line of electronic actuators. When connected to an electronic access control device, the AC-EM 10 Electronic Actuator can be used to remotely actuate a mechanical latch to open or unlock a door or panel. The actuator is designed for concealed applications where physical space constraints are a challenge. The AC-EM 10 is tested to IP55 for water and dust protection and can be retrofitted using a standard cable connection for manual override.
www.southco.com

Electric Actuators

Festo launched its ELGC low-cost linear axes and EGSC mini slide at IMTS 2018. Suitable for X-, Y-, and Z-axes applications, the ELGC spindle and toothed belt axes feature a internal, protected recirculating ball bearing guide. The EGSC mini slide is ideal for Z-axis movements or guided linear individual movement in any mounting position. These two drives share technical features, including weight-optimized design, matching interfaces and adapter kits. The corresponding motors offer flexibility in mounting. Using the universal fastening profiles, EGSC can be combined directly with the larger ELGC base axis without an additional adapter plate.

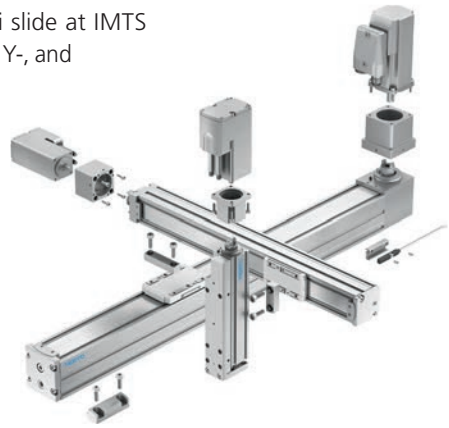

www.festo.us

Tensioning Pumps

Enerpac introduced its ZUTP1500-S Series of electric tensioning pumps that feature a pendant-operated solenoid valve, allowing a single operator to pressurize and retract the tensioner directly from the pendant. According to the company, the pump achieves high-pressure without the need for an intensifier. The pump also features a 7 hp universal motor, a manual override valve, a replaceable 10-micron reservoir breather and an inline high-pressure filter. It also features a two-stage pump design and a panel-mounted 6-inch pressure gauge.

www.enerpac.com

Fluid Power

PTFE Media Isolation Valves

Clippard's media isolation valves are solenoid-operated devices that use a flexible diaphragm to isolate the actuation mechanism from the fluid path. Media isolation valves are used for a variety of applications, including those that require precise, repeatable dispensing of media. All wetted areas of the valve are PTFE, making this series suitable for corrosive media. There's a one-piece valve stem that functions as a sealing membrane while also supporting and centralizing the poppet in the seating area. This multi-functional service results in a simplified design with fewer parts, longer life and zero dead volume. These valves are modifiable with various mounting, porting, material and voltage options. Industries and applications that use these types of valves to isolate gas or liquid include drug dispensing, laboratory equipment, analytical, chemical analysis, life science/biotech, genetic research, gas chromatography, spectrometry, DNA synthesizing, blood analyzing, printing, diagnostic equipment and fermentation.

www.clippard.com

Proportional Valves

Eaton announced it has added a pair of two-stage valve offerings to its Axis-Pro valve line and released its Pro-FX Configure software. The valves offer two-stage D05 (NG10) and D07 (NG16) designs that provide the same performance and closed-loop control as the single-stage AxisPro valves, but in a higher flow package. The existing line includes single-stage and two-stage valves that accommodate flow rates of up to 375 LPM. The valves are available in three performance levels and includes on-board motion control, sensors, diagnostics and communication. To program these valves, Eaton's Pro-FX Configure software features a wizard-based setup for parameter-based tuning using a step-by-step graphical workflow.

www.eaton.com

Hydraulic Combination Valve

Webtec unveiled its CV120 series combination valve for mobile machinery that features a variable priority flow divider combined with a directional control valve in one body. The valve comes with a marked single-turn hand dial and is pressure compensated, permitting both 'Priority' and 'By-Pass' to be used simultaneously at varying pressures without affecting the 'Priority' flow rate. The valve has two pump inlets and two tank outlets. Multiple valves can be employed in series by using a high-pressure carry-over (HPCO) coupling and standard fittings. CV120 valves offer a maximum operating pressure of 250 bar (3600 psi) and a total flow capacity of 120 lpm (32 USgpm), while regulated flow capacity is 0-95 lpm (0-25 USgpm). Porting choice is either 3/4-inch BSPP or 1-1/16-inch 12UN #12 SAE ORB thread sizes.

www.webtec.com

Power Transmission

Rail Guides

SKF Motion Technologies released its line of LLT profile rail guides designed for performance and long service life, the company says. The guides have the ball circuits

placed in an X-arrangement, which optimizes load sharing in all four main load directions. The line is available in sizes 15-45 with rail sizes up to 4000mm in a single piece with longer lengths available as attached rails. They can resist temperatures up to 100°C and achieve speeds up to 5 m/s. It also comes in eight carriage types with a single rail profile to meet most industry-standard dimensions. LLT guides are supplied ready-to-mount and are factory pre-lubricated. Carriages are equipped with end seals, side seals, and inner seals, as well as an internal lubrication reservoir for extended maintenance intervals.
www.skfusa.com

Planetary Robotic Gearbox

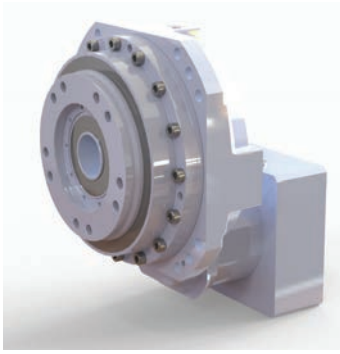

GAM Enterprises released its GPL line of Planetary Robotic Gearboxes. The GPL-V (shaft) and GPL-H (hollow) boast near zero backlash (≤ 0.1 arc minute) and its patented design guarantees backlash won't increase over its life time, the company says. In addition, the line features high tilting rigidity resulting in maintained positioning accuracy at a rated 20,000 hours of service life. The line's torque range spans 400-3,000Nm with ratios from 40-200 plus a 65 dB noise level and 90% efficiency. In total, the line offers seven frame sizes from 180-330mm and comes in right angle, subassembly and fully enclosed versions.
https://www.electromate.com

Sensors

Through-Beam Sensors

Balluff introduced its BGL family of IP67/IP69K, stainless steel fork sensors with resistance to aggressive cleaning agents, chemicals, coolants or other media. The sensors feature normally open and normally closed outputs as well as multiple light sources including a red or infrared light source. The line also includes a pigtail with an M12 connector and integral LEDs. For food and beverage applications, the line features PMMA optic lenses and stainless steel housing. According to the company, the sensor's self-contained through beam sensor doesn't require alignment.
www.balluff.com

Rotary Encoders

Pepperl+Fuchs introduced its ENI58IL rotary encoder with BlueBeam Technology, a short-wave blue emitter LED and receiver diodes that allow the encoder to maintain precision at rotational speeds up to 12,000 RPM. BlueBeam Technology allows a reduction in the tolerance of phase position A:B to well below 10 percent. Because the high-frequency sampling is less prone to interference, BlueBeam Technology also keeps signals stable when exposed to mechanical force like shock and vibration. Another advantage is the improved calibration of the code disk. The ENI58IL series also features interlocked bearings and EMC circuit protection. Various types of shafts (solid shaft, hollow shaft, recessed hollow shaft), flanges, (clamping, servo, square) and connections (axial and radial M23 or M12) are available.
www.pepperl-fuchs.com

Advertisers Index