DESIGN ENGINEERING

DESIGN-ENGINEERING.COM NOVEMBER/DECEMBER 2020

MEDICAL DESIGN IN THE TIME OF COVID

StarFish Medical pulls off near impossible design feat with development of the Winnipeg Ventilator 2.0.

PM 40065710

The importance of *indoor air quality.*

We are spending more time indoors, at home and at work. Unfortunately, our homes and offices trap harmful pollutants and allergens like CO2, tobacco smoke, pet dander, pollen, volatile organic compounds (VOCs,) dust, dust mites, mold spores, viruses, bacteria, and other harmful contaminants.

The ebm-papst RadiCal© impeller with EC technology offers the perfect range of high performance to whisper quiet operation while consuming less energy in air purification products. For more information on RadiCal© or ebm-papst EC technology, please contact us at: **sales@us.ebmpapst.com**

ebmpapst

the engineer's choice

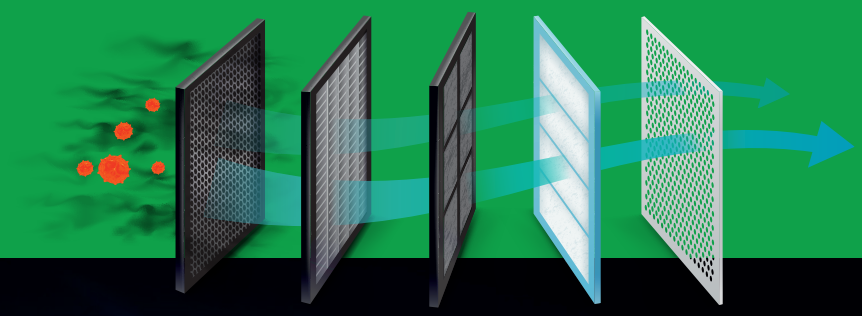

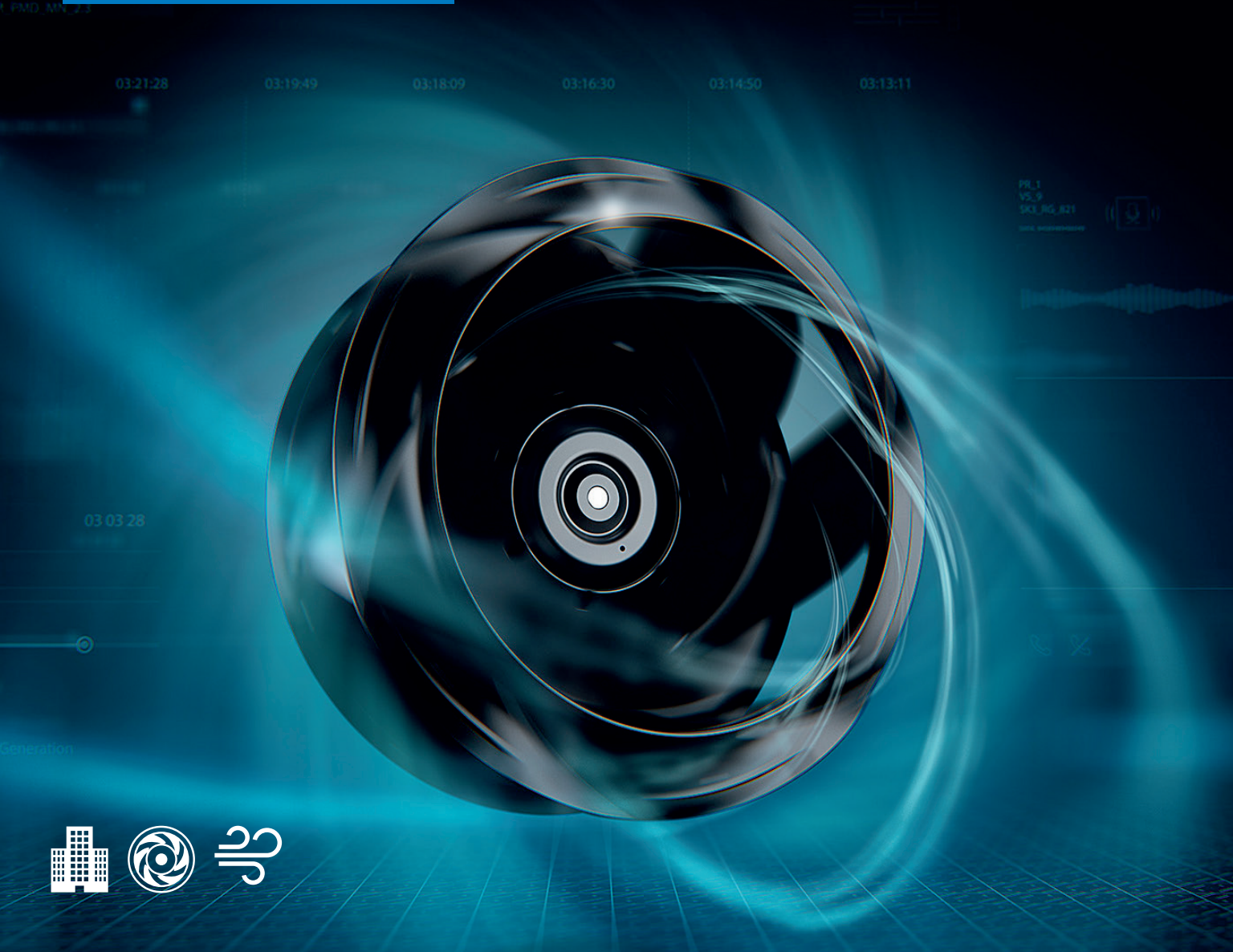

INSIDE

Photo: Credit tk here

Columns

Pandemic Innovation

As the close of 2020 approaches, there's a growing global desire to put this "lost year" in the rear-view mirror. Unfortunately, viruses don't read calendars. With the pandemic's second wave surging across North America and much of the world, some level of lockdown is expected to continue through to the summer of next year.

Despite the handful of highly effective vaccines announced, as well as those still in development, generally availability may take until the second half of 2021, the U.S. CDC anticipates.

Even so, the pandemic has primed the innovative instincts of many Canadian engineers, researchers and product development companies, a number of which have been profiled and in this and previous issues of Design Engineering this year. However, we didn't get to all of them.

Some are as simple as the COVID Box by Toronto startup, Taplytics. Inspired by an open source design by Dr. Hsien Yung Lai of Taiwan, the transparent cube-shaped shield allows physicians to perform high risk procedures, like inserting an airway in a COVID-19 patient, while limiting exposure.

Assembling the box only requires snapping together a few sheets of polycarbonate. Hand-sized circular cutouts allow medical personnel to work on patients safely. Taplytics co-founder and CTO, Jonathan Norris, used his mechanical engineering training to create a version that could be quickly manufactured and supplied to Canadian hospitals.

Other COVID inventions are bit more sophisticated. Among them is a Bluetooth enabled single-use monitor, developed by Sudbury, Ontario's Flosonics Medical. The small device adheres to a patient's skin and allows health works to collect vital stats remotely.

A personal favorite, though, is the BioVYZR 1.0, an air purifying helmet, developed by Toronto's VZYR Technologies. Reminiscent of a hazmat suit head piece crossed with an original Star Trek space suit, the helmet envelops the wearer's head and torso, has a large clear plastic visor and straps to user's upper chest.

For air flow, the BioVYZR's rechargeable fan pulls in outside air, filtered through a replaceable N95 particulate filter disks. Complete with a zippered compartment and built in gloves – to scratch your face without breaking the seal – this helmet is the perfect accessory for the fashion-conscious, post-apocalyptic wanderer on the go.

MIKE MCLEOD
Editor
mmcleod@design-engineering.com

DESIGN ENGINEERING

NOVEMBER/DECEMBER 2020
Volume 65, No. 6
design-engineering.com

SENIOR PUBLISHER Paul Burton
(416) 510-6756 · pburton@annexbusinessmedia.com

EDITOR Michael McLeod
(416) 442-5600 ext. 3231
mmcleod@design-engineering.com

ACCOUNT MANAGER Wendy Serrao
(647) 628-3610 · wserrao@annexbusinessmedia.com

NATIONAL ACCOUNT MANAGER Ilana Fawcett
(416) 829-1221 · ifawcett@annexbusinessmedia.com

ACCOUNT COORDINATOR Cheryl Fisher
(416) 510-5194 · cfisher@annexbusinessmedia.com

AUDIENCE DEVELOPMENT MANAGER
Beata Olechnowicz (416) 510-5182
bolechnowicz@annexbusinessmedia.com

COO Scott Jamieson
sjamieson@annexbusinessmedia.com

Design Engineering, established in 1955, is published by Annex Business Media, 6 times per year except for occasional combined, expanded or premium issues, which count as two subscription issues.

Printed in Canada

Publications Mail Agreement #40065710

ISSN: 0011-9342 (Print), 1929-6452 (Online)

Subscriber Services: Canada: $57.50 for 1 year; $92.50 for 2 years; $10 for single copy.
Outside Canada: USA - $140.50; Overseas - $151.00; $10.00 for single copy. Directory/buyer's guide: Canada $28; Outside Canada $46.
All prices in CAD funds. Add applicable taxes to Canadian rates.

CIRCULATION email: bolechnowicz@annexbusinessmedia.com · Tel: (416) 510-5182
Fax: 416-510-6875 or 416-442-2191
Mail: 111 Gordon Baker Rd., Suite 400, Toronto ON M2H 3R1

From time to time we make our subscription list available to select companies and organizations whose product or service may interest you. If you prefer not to receive this information, please contact our circulation department in any of the four ways listed above.

Annex Privacy Officer:
privacy@annexbusinessmedia.com
Tel: 800-668-2374

Funded by the Government of Canada
Financé par le gouvernement du Canada | Canada

Alliance for Audited Media · ANNEX BUSINESS MEDIA · Magazines Canada

Rated 4.9 out of 5
by satisfied PLC customers…

AUTOMATIONDIRECT.com
Highly-rated, feature packed PLCs available at your fingertips, 24/7/365

BRX PLCS
starting at:
$197.00
(BX-DM1-10AR-D)

BRX

Unlike other suppliers, at AutomationDirect we welcome any feedback we get on our products, especially our PLCs. We display all product reviews we receive on our Webstore to help others make informed buying decisions. So, if your supplier can't answer the question, "What is the customer satisfaction score for this product?", then maybe you need a new supplier!

Our BRX PLCs have a multitude of impressive features (too long to list) but here are a few highlights:

- Serial/Ethernet comm ports included on most models (with support for Modbus RTU/TCP, ASCII, EtherNet/IP, MQTT and HTTP)
- Built-in discrete, analog and high-speed I/O with advanced motion control
- Internal RAM and microSD data logging
- Free PLC programming software with over 200 easy-to-use instructions, integrated video help, and a convenient simulator

4.9 ★★★★½

"Great feature set, FREE DEVELOPMENT SOFTWARE! Structures (UDT) allow for OOP programming! Many features added regularly and good support from AD (AutomationDirect) and manufacturer (Host). Have these operating many projects including Water Distribution, Water Treatment and more. Don't mind the AB guys talking down on them, they are just a bit upset they can't charge a few grand more for less features and software."

Michael in VICTORVILLE, CA

www.BRXPLC.com

Orders over $49 get FAST FREE SHIPPING

Our shipping policies make it easier than ever to order direct from the U.S.!

Fast free standard shipping* is available for most orders over $49 U.S., and that includes the brokerage fees (when using an AutomationDirect nominated broker). Using our choice of carrier, we can reach most Canadian destinations within 2 to 3 days.

*Free shipping does not apply to items requiring LTL transport, but those shipments can take advantage of our negotiated super-low flat rates (based on weight) that include brokerage fees.

See Web site for details and restrictions at:
www.automationdirect.com/canada

To see all products and prices, visit www.automationdirect.com

All prices shown are U.S. Dollars

Order Today, Ships Fast!

VOTED Best in SERVICE 15 YEARS

AUTOMATIONDIRECT.com
1-800-633-0405 the #1 value in automation

AUTOMOTIVE

APMA UNVEILS PROJECT ARROW VEHICLE DESIGN

Canada's Automotive Parts Manufacturers' Association (APMA) unveiled the winning design for it's Project Arrow, an initiative to create an all-Canadian designed, engineered and built zero-emission electric vehicle, using parts and systems exclusively from Canadian part manufacturers.

Submitted by a student team from Carleton University's School of Industrial Design, the winning concept was chosen from a field of three finalists and nine total submissions.

"With this design, the team from Carleton University has given a face to the name of Project Arrow that one day, we hope, will launch a thousand shifts," said APMA president, Flavio Volpe.

Based on a small sports utility vehicle, the design expresses the concepts of freedom, stability and simplicity, the four-member Carleton team said, and is designed to suit Canadian weather conditions and family needs.

Officially launched at CES 2020, Project Arrow is scheduled to progress in four phases. According to the APMA, it will announce the engineering specifications and supplier RFP later this Fall followed by a virtual concept unveiling in 2021 and the physical concept car unveiling in 2022.

Toward that goal, the APMA announced that Ontario Tech University will lead development of the vehicle. In addition, the association said a digital twin of the vehicle will be tested using the Windsor Essex Economic Development Corporation's VR CAVE (Cave Automatic Virtual Environment).

The VR technology employs multiple projectors that display against three to six walls of a room-sized cube and will allow designers and engineers to collect data and make adjustments to the design before committing to a physical build.

https://projectarrow.ca
https://apma.ca

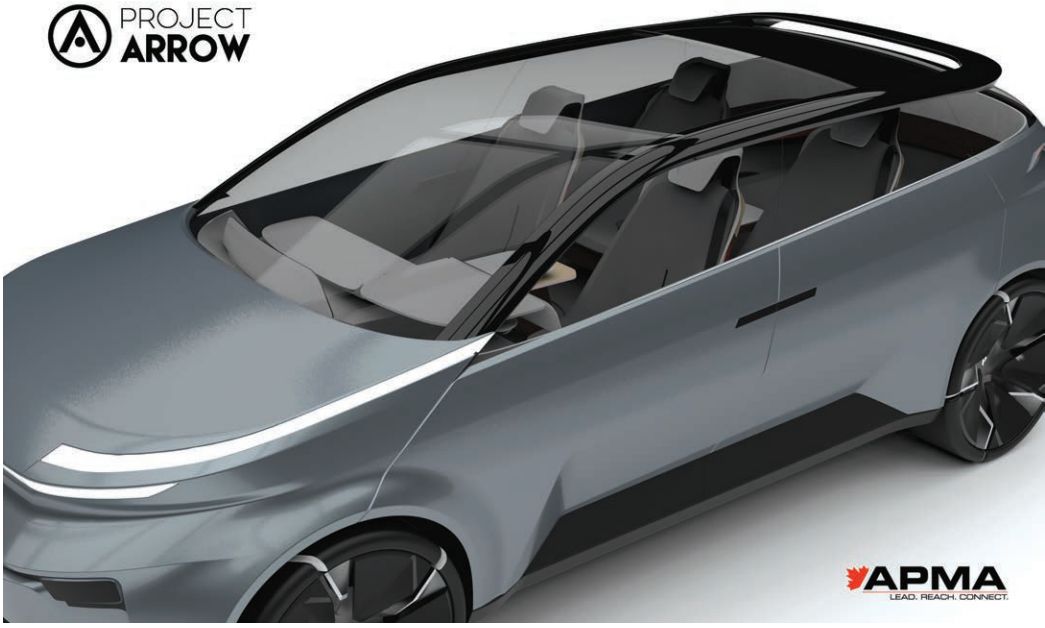

A rendering of the winning design for the APMA's all-Canadian Project Arrow electric vehicle.

MAGNA APPOINTS NEW CEO

(Photo credit: Magna International)

Magna International's president and future CEO, Seetarama "Swamy" Kotagiri

Magna International announced the appointment of Seetarama "Swamy" Kotagiri as CEO, effective January 1, 2021. He replaces Don Walker, who will retire at the end of 2020 after serving as CEO between 1994 and 2001, and since 2005.

In his 33-year career at Magna, Walker served in various leadership roles including Vice President Product Development and Engineering, COO and President, in addition to CEO of former Magna "spinco," Intier Automotive Inc. between 2001 and 2005.

Currently serving as Magna's President, Kotagiri has more than 25 years of automotive industry experience, 21 of which have been with Magna. In his previous role as Magna's CTO, the company further strengthened its culture of innovation by forming partnerships in areas including autonomy, electrification, electronics and connectivity, Magna says.

"Given Swamy's role in aligning the company's strategy with the megatrends impacting new mobility and the 'car of the future,' he is the right leader to take Magna forward," said William L. Young, Chairman of Magna's Board of Directors. "Swamy has a strong command of the business, sound judgment and is a strategic thinker who can drive disciplined execution."

While CTO, he also served in various leadership positions including President of Magna Electronics, Magna Powertrain and the company's Power and Vision segment. Early in his Magna career, he also held various engineering and operating positions at Cosma International, a Magna operating unit. Kotagiri holds a master's degree in mechanical engineering from Oklahoma State University with a specialization in materials and structural engineering.

www.magna.com

INRS RESEARCHERS' UV-CUP BILLED AS WORLD'S FASTEST UV CAMERA

A team of researchers at the Institut national de la recherche scientifique (INRS) announced the development of the world's fastest UV camera. Called UV-CUP (Compressed ultrafast photography), the camera can capture up to .5 trillion frames per second, allowing it to record the motion of ultraviolet photons in real time.

According to team leader, INRS professor Jinyang Liang, UV-CUP captures images at light speed through a blend of unique hardware and software. Working with Québec's Axis Photonique Inc., a manufacturer of ultrafast imaging equipment, the team designed the system to use a patterned photocathode that simultaneously detects and encodes UV light.

"Like a standard camera, our technology is passive," explains Liang. "It does not produce light; it receives it. Therefore, our photocathode had to be sensitive to the photons emitted as UV light. This design makes our technique a stand-alone system that can be easily integrated into various experimental platforms."

Once an image is captured, it has to be reconstructed as a video, Liang says. For this, the team collaborated with Boston University to developed a new algorithm that improves on standard algorithms by dividing the process into smaller individual problems rather than one lump sum.

Now that it's complete, the INRS team says the UV-CUP camera will be sent to the SOLEIL Synchrotron research laboratory in France where it may be used to capture laser-plasma generation, a phenomena used to deduce material properties, and in medical imaging to identify disease biomarkers.

https://inrs.ca/
www.axis-photon.com

MEDICAL

UWO RESEARCHERS DEVELOP HIGH-TECH ORGAN, VACCINE TRANSPORT COOLER

A team of researchers from Western University has developed and constructed a portable temperature regulating device, designed to transport organs, vaccines and other temperature-sensitive items.

According to Western mechanical engineering professor and project lead, Kamran Siddiqui, medical facilities still use primitive cooling methods, like ice packs or ice cubes, which limit the ability to keep sensitive items within the narrow temperature range necessary to prevent tissue damage or spoilage.

The new device, developed by Siddiqui and Steven Jevnikar, his former graduate student and now a research associate at Lawson Research Institute, can be controlled and maintained at a constant-set point temperature for an extended period of time.

Battery powered, the portable cooler can vary its internal temperature to different set points for different time durations and be controlled and monitored remotely.

According to Siddiqui, the high-tech cooler uses phase change materials to release and absorb energy to maintain a required temperature range, which is narrow for safe and effective transport of COVID-19 vaccines currently under development.

"The need for safe transportation has never been more evident than today as the global COVID-19 pandemic affects all of our lives," said Siddiqui. "Our technology is very promising and has already attracted international interest."

The project arose from collaboration between Western Engineering, the Schulich School of Medicine and Dentistry, the Lawson Health Research Institute and LHSC Centre Multi Organ Transplant Program. It is supported by NSERC grants, as well as WORLDiscoveries.

www.uwo.ca

Western University's portable, temperature regulating "cooler" designed for organ transport.

D-WAVE UNVEILS LEAP QUANTUM COMPUTING SERVICE

Burnaby, BC's D-Wave Systems Inc. announced that its next-generation quantum computing platform, Leap quantum cloud service, is now open for generally availability.

The service includes D-Wave's latest Advantage quantum system, which boasts more than 5000 qubits and 15-way qubit connectivity.

Targeted at business users, the Leap service also includes

D-Wave's new hybrid discrete quadratic model (DQM) solver that it says can run computational problems with up to one million variables.

Instead of accepting problems with only binary variables (0 or 1), the DQM solver uses other variable sets (e.g. integers from 1 to 500, or red, yellow and blue), which expands the types of problems that can run on the quantum computer, the company says.

Beyond new hardware and software, the company also announced D-Wave Launch, a jump-start program designed to help businesses that want to get started building hybrid quantum applications but need additional support.

The program provides support to help identify the best applications and to translate businesses' problems into hybrid quantum applications.

www.dwavesys.com

5000

The number of qubits in D-Wave's latest Advantage quantum computer.

SFU ENGINEERS DEVELOPING 3D-PRINTED MECHANICAL VENTILATOR

Researchers at Simon Fraser University have developed a 3D-printed mechanical ventilator. In addition, the team – headed by SFU's School of Mechatronic Systems Engineering associate professor, Woo Soo Kim – says the portable ventilators could cost less than $600.

Presently in the prototype stage, the SFU ventilator features an additively manufactured, origami-inspired tube in place of a traditional bag-valve mask. According to Kim, the design change reduced the overall size of their ventilator and allowed it be portable.

To develop the prototype, SFU has partnered with Vancouver-based mechanical and electrical engineering design firm, Pantheon Design. When complete, it will be evaluated by respiratory therapists at Vancouver Coastal Health and then mass produced by Canadian 3D-printer maker, Tinkerine, once it has been tested and certified. The project is supported by NSERC's Alliance program.

www.sfu.ca
tinkerine.com
pantheondesign.ca

Simon Fraser University's 3D printed ventilator uses this origami-inspired tube in place of a bag-valve mask.

AEROSPACE/DEFENCE

BOEING SAYS SUPER HORNET SELECTION WOULD PROVIDE $61 BILLION BOOST TO CANADIAN ECONOMY

Boeing announced five new agreements with Canadian aerospace companies, that the company says would deliver CAD$61 billion and nearly 250,000 jobs to the Canadian economy.

That is, if the aerospace giant's F/A-18 Block III Super Hornet is selected over Lockheed's F-35 or Saab's Gripen E for Canada's Future Fighter

Capability Project (FFCP).

According to data and projections from economists at Ottawa-based Doyletech Corp., the economic benefits to Canada and its workforce would last approximately 40 years and be worth billions in economic growth. The five Canadian aerospace companies with potential agreements include:

CAE (Montreal): Boeing and CAE's Memorandum of Understanding (MOU) outlines the implementation of a comprehensive training solution for the Block III Super Hornet under full control of the RCAF.

L3Harris Technologies (Mirabel, QC): The MOU includes a range of sustainment services, including depot and base maintenance, engineering and publications support for the Canadian Super Hornet fleet; potential for other Super Hornet depot work; and maintenance scope for Canada's CH-147 Chinook fleet.

Peraton Canada (Calgary): Boeing and Peraton currently work on CF-18 upgrades, which would expand to include Super Hornet avionic repair and overhaul work in Canada.

Raytheon Canada Limited (Calgary): Raytheon Canada's MOU outlines the implementation of large-scale supply chain and warehousing services at Cold Lake and Bagotville to support the new Super Hornet fleet, as well as potential depot avionics radar support.

GE Canada Aviation (Mississauga, ON): Under this agreement, GE Canada would continue to provide on-site MRO support services for the Super Hornet's F414 engines, as well as technical services and engineering within Canada in support of RCAF operations and aircraft engine sustainment.

The aerospace giant's history in Canada stretches back to 1919. Boeing and its partners provided the F/A-18s in the mid-1980s More recent obligations including acquisition of the C-17 Globemaster and the CH-47F Chinooks. In 2019, Boeing's direct spending rose to C$2.3 billion, a 15% increase in four years.

www.boeing.com

*Visit **design-engineering.com** for the latest new products, news and industry events.*

CAD of All Trades

BricsCAD V21's latest features, single file format and direct 3D editing make it suited to a wide range of industries and design tasks.

BY RALPH GRABOWSKI

Never mind the big budgets of the companies behind Inventor, Solid Edge and Solidworks. Operating under the radar are a lot of small MCAD systems that are doing just fine. Firms like Ashlar-Vellum, NanoSoft and VariCAD benefit from hundreds of thousand of users whose allegiance keeps the companies afloat, decade after decade.

Other small MCAD firms, however, wondered about their future viability, and so allowed themselves to be bought up by billionaire firms, such as SpaceClaim by Ansys, Onshape by PTC and Bricsys by Hexagon.

Bricsys is possibly the least MCAD-like of these companies. Its software straddles areas like architectural, civil, mapping, mechanical, sheet metal and general CAD. The software is ambidextrous because it uses AutoCAD's DWG as its do-it-all format. This goes against the grain of Autodesk, which has deployed a different file format for each of its vertical products. This has left Autodesk with a Tower of Babel-sized translation problem; for Bricsys, no translation is needed.

A decade ago, Bricsys undertook two moves to help develop BricsCAD more rapidly. It decoupled itself from the IntelliCAD code on which it was originally sold, and then acquired direct editing and 2D/3D constraints technology from Russia's LEDAS Group.

Now that it controls the core code, Bricsys can develop technology for one discipline, and then spread it to others. It has a common platform: what works in BIM, works in MCAD; what works on Windows also works on Linux.

The BricsCAD Lineup

BricsCAD is sold in several editions (prices are for perpetual licenses in Canadian funds):

- **BricsCAD Shape** – A free 3D modeler meant to compete against SketchUp
- **BricsCAD Lite** ($760) – A low-end 2D-only drafting program that includes LISP
- **BricsCAD Pro** ($1,280) – General 2D drafting and direct 3D modeling with 2D/3D parametrics
- **BricsCAD Ultimate** ($2,680) – All software listed above and below (see figure 1).

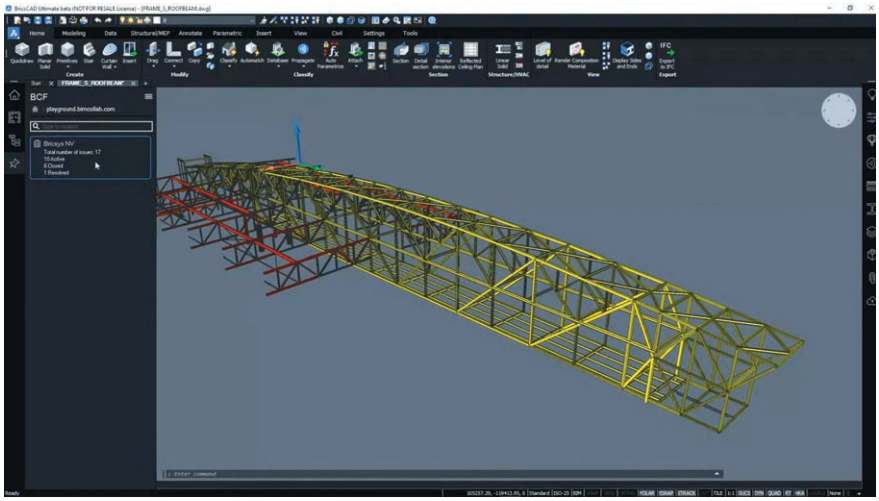

Figure 1: BricsCAD V21 Ultimate combines general CAD with mechanical and BIM functions

Verticals require BricCAD Pro:

- **Communicator** module ($700) -- MCAD file translator
- **BricsCAD Mechanical** module ($2,360) – For assemblies, automatic BOMs and sheet metal design
- **BricsCAD BIM** module ($2,480) – For architectural modeling

Civil engineering is currently part of the Pro edition, but I can see it being spun out next year. No CAD vendor is complete without a cloud offering, and so here is what Bricsys offers:

- **Bricsys 24/7** – Subscription-based online collaboration
- **BricsCAD Cloud** – Online drawing access inside BricsCAD; available only with a subscription
- **Bricsys Collective** – Online store of third-party add-ons

How BricsCAD Mechanical Works

BricsCAD is a direct modeler. This means you don't start 3D modeling with 2D sketches or work with a history tree. Instead, BricsCAD is like SpaceClaim where you push and pull faces of 3D primitives and apply 2D and 3D constraints. As well, you can import 3D files from other systems and then have BricsCAD convert them to constrained models.

As all drawings are stored in DWG format, Bricsys had to come up with workarounds. For example, to create assemblies, BricsCAD attaches parts as xrefs, then connects them with 3D constraints. Some types of data are stored in other formats, such as point clouds in BPT (Bricsys PointTree) files.

Bricsys says its software uses AI, but I suggest the techniques instead involve large-scale search and replace. For

instance, the Blockify command finds all identical instances of entity groups within a fudge factor and converts them to blocks.

The Optimize command looks for slightly angled lines with gaps, and then straightens and joins them. The Propagate command searches for likely elements like joints and then adds connections (see figure 2).

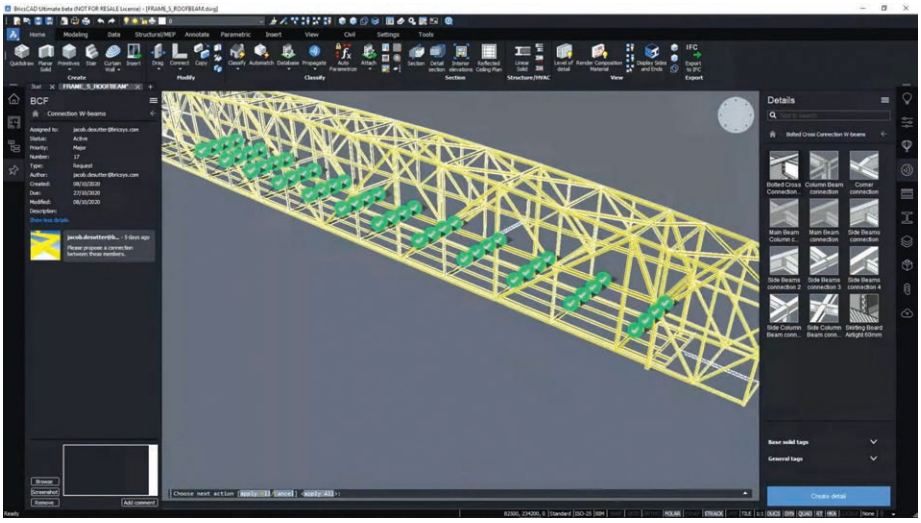

Figure 2: BricsCAD V21's propagate command finding all identical instances of joints.

What's New in BricsCAD Mechanical V21

The last few releases involved BricsCAD getting a base set of mechanical functions, and so V21 fine tunes it. Fillets can have variable-radius curves and chamfers can have multi-angle cuts; both can be edited interactively. Once threads are drawn on cylinders and cones (bolts), they are represented in drawing views according the specified standard.

Sub-d meshes are brought up-to-date with variable smoothness levels (0= none, 5 = max); editing of faces, edges and vertices; and conversion to solids. Related to this, when a model is imported from SketchUp, its mesh objects are converted to blocks for easier handling, and the materials are imported for re-use in BricsCAD.

For about half the price of AutoCAD, BricsCAD includes 3D constraints. As of v21, you can place 3D constraints at the vertices and segments of 3D polylines, and use 3D angle and radius constraints with blocks. Any geometry with 3D constraints and parameters is now automatically treated as geometry-driven.

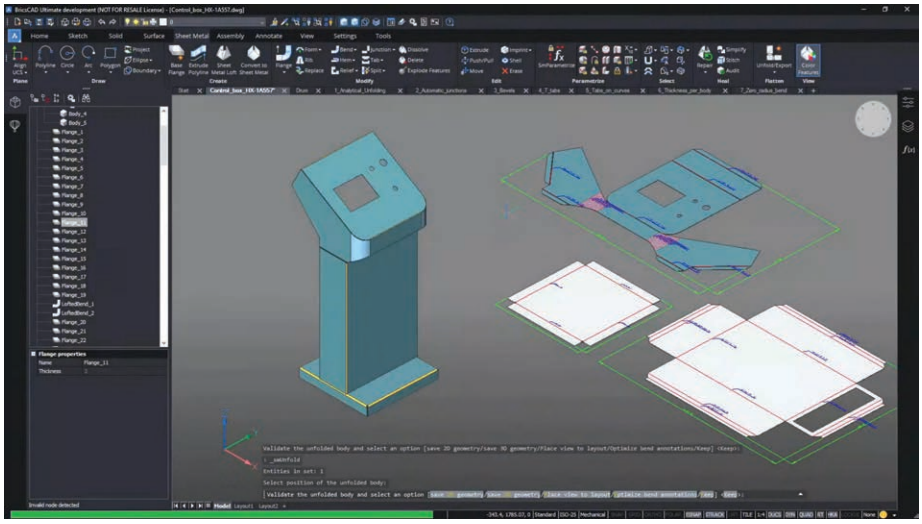

Figure 3: BricsCAD Mechanical unfolding sheet metal generated from a solid model.

Related to this are "parametric blocks," which – like AutoCAD's dynamic blocks – take 2D constraints, except that in BricsCAD they also take 3D constraints. A new command converts selected geometry to parametric blocks so that we don't have to figure out how to do it.

Sheet metal was the first enhancement in BricsCAD Mechanical to show off its capabilities. New functions include tabs along curves, per-body thickness and zero-radius bends. Like other MCAD vendors, BricsCAD V21 converts solid models to unfolded sheet metal parts (see figure 3).

New in V21 is piping and a library of 200 parametric parts. Connections are made automatically between parts so that when you move a T or a pipe, all connected parts stretch and move along with it. The new Move-Guided command moves entities along guide curves to automatically align blocks to geometry.

Bricsys is working on the problem of converting point clouds to geometry, like some other CAD vendors. New commands in V21 fit lines to flat projections and planes to planar parts of point clouds. The Bubble Viewer navigator colorizes point clouds according to their x,y,z orientation in space (see figure 4). Point clouds in drawings can be clipped and exported to PTS files.

The output from 3D models often is a set of 2D drawings. In V21, long objects can be shorted with the ViewBreak command. The new Drawing Customizations panel lets you define color coding for areas and automatic tag placement for parts.

The new Animation Editor animates exploded views in model space. Drawings can be exported in MicroStation DGN and 3D PDF formats, as well as imported as entities from Revit drawings in RVT and RFA formats. History is recorded individually for every entity, allowing per-entity undoes and redoes.

In its early years, Bricsys wandered about in hopes of distinguishing itself from the thirty-plus other AutoCAD clones. The CEO is an architect by profession, and so it came as a surprise that the first in-house vertical was mechanical software and, more specifically, in the niche of sheet metal design.

There is a simple reason for the apparent contradiction: MCAD is simply easier to implement than BIM. Once Bricsys figured out the mechanical side of things, it applied them to the architectural side. Using the "universal" DWG file format has allowed the company to demo a mechanical plant inside a building set upon a 3D topographical site.

What BricsCAD Mechanical lacks is a strong connection to CAM and links to simulation software. This puzzles me, as owner Hexagon processes half-a-dozen CAM and simulation packages. In the two years following the acquisition, the only linkage with point clouds came from Hexagon-owned Leica Geosystems. Maybe next year.

Bricsys is a small CAD company that produces an astonishing number of new features each year, putting much larger CAD vendors to shame.

While not as mature as industry stalwart Solidworks, BricsCAD Mechanical is worth a look for its modern roots and modest pricing. Bricsys says BricsCAD V21 will be released in late October.

www.bricsys.com

Ralph Grabowski writes on the business of CAD on his WorldCAD Access blog (www.worldcadaccess.com) and weekly upFront.eZine newsletter.

Figure 4: BricsCAD's Bubble Viewer identifying groups of point clouds as CAD entities

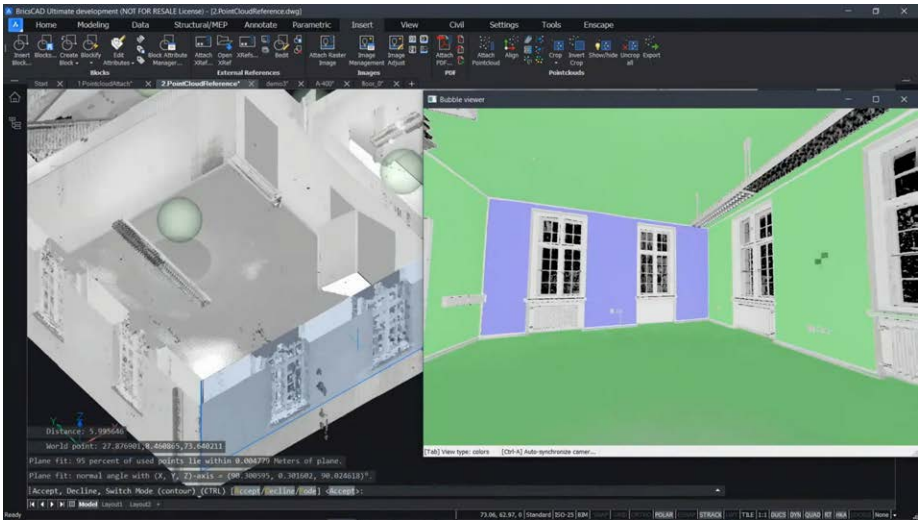

BODY DOUBLE

3D printed 'twins' give neurovascular surgeons a confidence boost prior to aneurysm surgery.

The human brain is an incredibly complex organ supported by an equally intricate (and delicate) network of blood vessels. So for neurosurgeons, precision is critical when it comes to treatment and surgery. Every micrometer counts when faced with problems such as aneurysms and blocked arteries. That's why surgeons are turning to training on 3D-printed twins.

In early November 2019, a surgical team at Toronto Western Hospital, led by Dr. Vitor Mendes Pereira, a neurosurgeon and neuroradiologist at the hospital's Krembil Brain Institute, successfully performed the first-ever robot-assisted stent placement and aneurysm coiling procedure.

The robotic CorPath GRX system gave the team an extra sets of arms and eyes, and unmeasured control to successfully complete the procedure and achieve a positive patient outcome.

It wasn't as simple as dropping a robot into a surgical suite and exercising a few keystrokes. This pioneering step required extensive testing and refinement. And practice. Fortunately, Dr. Pereira and team had a readily available solution based on their use of "anatomical twins" to rehearse for other novel and complex cases.

Advances in biomechanically realistic 3D printing make practice easy and cost-effective. These anatomical twins are 3D models that mimic the structure and texture of the individual patient's arteries and surrounding tissue.

Created by medtech innovator BIOMODEX, the replicas were built using medical scans brought to life by the company's proprietary modeling software, and Stratasys 3D printers and advanced materials.

"The realism is remarkable," said Dr. Pereira. "We were essentially able to perform the procedure before performing the procedure and sharpen our approach. This allowed the team to enter surgery with confidence, and decrease the associated time and risk."

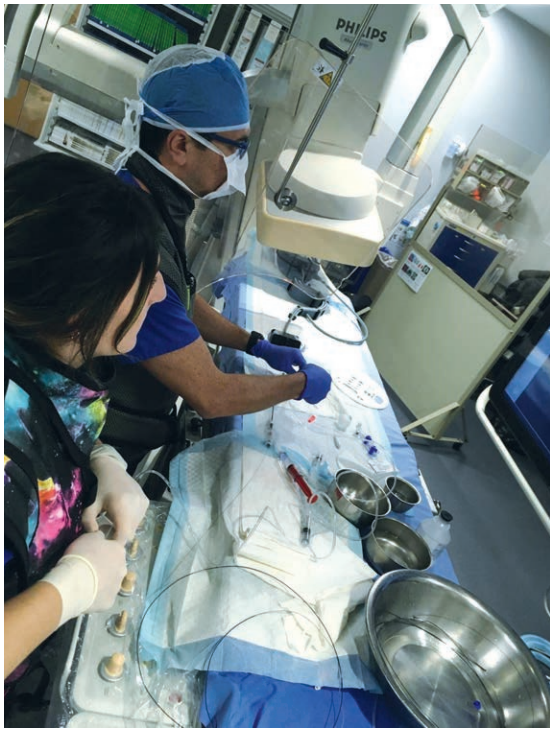

In addition to geometry, Biomodex's INVIVOTECH "twins" also mimic the material properties and blood flow of the arteries surgeons will encounter during surgery.

These 3D printed replicas of unruptured aneurysms, produced by Biomodex using Stratasys printers, allow neurosurgeons to practice delicate brain surgery prior to the actual procedure.

3D-printed twins.

BIOMODEX develops anatomical twins to help scientists and physicians, such as Dr. Pereira, with patient-specific training and rehearsal. The goal is to produce models with a look, feel and experience that is true to what a doctor will encounter during a real procedure on a real patient.

The company uses multiple Stratasys J750 printers and PolyJet materials to ensure the dimensional accuracy and mechanical behavior of the original anatomy. Exact down to the microscopic level, the models are paired with a portable simulation station that injects liquids to recreate blood flow.

"The material mix has to be accurate," said Stéphane Caporusso, global VP of operations for BIOMODEX. "Precision is critical so the training or rehearsal is as close to real as possible."

While the use of models for medical training isn't necessarily new, time has been a limiting factor. Historically, they've taken months to create — not a practical option when patients require rapid intervention. The BIOMODEX difference is using 3D printers for higher-volume, but extremely detailed production. The Stratasys printers run for 15

hours a day, every day, producing up to 3,000 models per year, per machine.

Because of the capability of the 3D printers and utility of the materials, the turnaround time from medical imaging to delivery of an anatomical twin is just a few days.

Introducing robots

For Dr. Pereira, using BIOMODEX anatomical twins was critical to preparing for his first-of-its-kind, robot-assisted intervention. By using an anatomical twin, the team was able to identify, record and mitigate potential issues and ensure the stent they had selected for the patient was the correct size.

The rehearsal also provided an opportunity to integrate and coordinate the surgical assistants and CorPath GRX system. Because robotic procedures are done remotely, Dr. Pereira worked nearby while the bedside team synchronized with the robotic arm to place the stent and secure the aneurysm. The team was able to adjust their workflow for the procedure based on what they'd learned from the rehearsal.

"The robotic physician can't 'see' what we're doing in the same way we can," Dr. Pereira. "So coordination and communication are key during robotic procedures."

Once the first procedure was complete, Dr. Pereira realized the approach could have an impact far beyond the walls of this one hospital.

Advancing neurovascular procedures

Toronto Western is a teaching facility. Robotics or not, the 3D printed models from BIOMODEX and Stratasys give residents lifelike, case-specific experience as they learn and refine their skills, the type of experience they're not able to get with cadavers.

And since the initial surgery, Dr. Pereira and his team have successfully completed several additional aneurysm interventions with the help of CorPath GRX and anatomical twins. Their success marks the first step toward his vision of remote neurovascular procedures.

"The ability to deliver rapid care through remote robotics could have a huge impact on improving patient outcomes and allow us to provide cutting-edge treatment to patients everywhere, regardless of geography," Dr. Pereira said.

The method demonstrates the benefits and potential reach of combining robotic and 3D-printing technologies. Underserved populations could soon receive high-level care for critical procedures – with their doctor fully prepared and sitting miles away.

www.biomodex.com
www.stratasys.com

"The realism is remarkable. We were able to perform the procedure before performing the procedure"

This article was provided by Stratasys.

ORCHESTRAL AUTOMATION

ATS Automation's modular Symphoni technology combines the speed of continuous motion with the precision and flexibility of robotic assembly. **BY MIKE MCLEOD**

When Pfizer and BioNTech announced that their experimental COVID-19 vaccine had tested 90 percent effective in November, hopes immediately lifted that the end of the pandemic was in sight.

Provided their vaccine and others pass the remaining regulatory hurdles, the road ahead will depend on a manufacturing and logistical effort on a global scale.

Given that COVID vaccines will likely require two shots, estimates put the number of doses needed at 700 million injections for the U.S. alone.

To meet that challenge, the U.S. government launched Operation Warp Speed, an initiative to produce millions of vaccine doses, plus the necessary medical supplies to do the job.

As part of that effort, a U.S. medical device manufacturer awarded ATS Automation a $20 million contract in September to design and build several automated manufacturing systems capable of mass-producing safety syringes as quickly as possible.

Unlike the automation giant's previous machine builds, this order will incorporate a new technology called ATS Symphoni.

According to Peng Cau, VP Sales, Emerging Markets and Symphoni at ATS Automation, this digital assembly technology enables the design of machines that combine the high-speed of continuous motion with the precision and flexibility of indexing or robotics-based assembly.

"To explain Symphoni, a helpful metaphor is to imagine you are on a train and I'm on a platform and I want to hand you a bottle of wine," says Cau. "If we do that by indexing, the train stops and I hand you the bottle. It's very gentle and precise but there's a lot of lost time in starting and stopping. With continuous motion, the train doesn't stop so I hand off the bottle at full speed but there's the danger of smashing it."

A high-speed automation system based on ATS 's Symphoni digital manufacturing technology

"With Symphoni, the train doesn't slow down or stop; instead, I speed up, like Superwoman, to match the train's velocity and gently hand over the bottle. That synchronized motion is made possible by the Symphoni OS software and the system's overall architecture."

In addition to speed and precision, another core differentiator is the technology's flexibility. In place of custom machines designed to make one or a limited set of products, a Symphoni-based system is composed of multiple modular building blocks, sub-systems that each perform a set operation.

By adding, removing, rearranging and/or re-tooling the modules, systems can be quickly configured and reconfigured. As a result, Symphoni systems are multi-purpose, Cau says, flexibly adapting to assemble new products, as markets change or the need arises.

While a new technology to ATS, Symphoni is currently in its fifth generation. It was invented and patented in 2012 by Transformix, a mid-sized Kingston, Ontario-based automation company established in 1995 by Ms. Cau and three of her fellow Queen's University engineering alumni.

Before ATS acquired Transformix and its IP in 2018, the technology had been used in the design 36 machines and went by the name CNCAssembly – a brand intended to suggest a fully programmable machine that makes a wide variety of parts by simply changing its tooling and software code.

According to Chris Hart, ATS President of Life Sciences, it was those qualities that drove the decision to acquire Transformix.

"At the time, we felt we were very strong on the asynchronous side but not as strong on the synchronous, continuous motion side. A number of our competitors had strong offerings and I didn't feel we wanted to be just a 'me too' continuous motion provider," he says.

"Traditionally, continuous motion is very hard tooled to a particular product that will run for a number of years and not very change over friendly. So, when we discovered what Peng, Ken and the team were doing at Transformix – a very flexible, a modular system that's easy to adapt to new variants – we could quickly see the match as a spring board beyond what our competitors were offering."

800

The number of microseconds needed for an ATS Symphoni system to check the position of each system device.

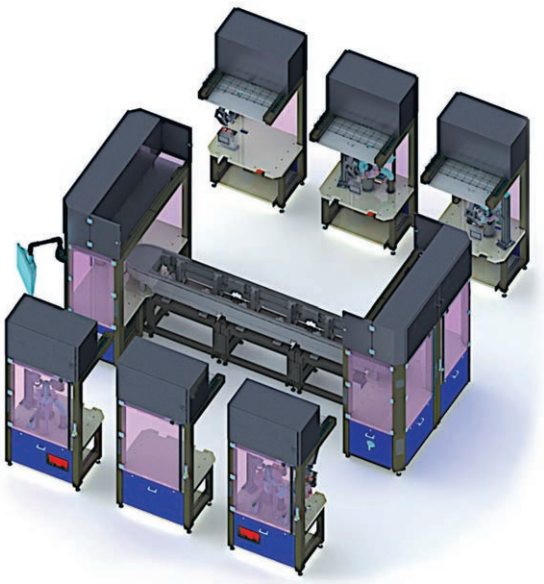

Symphoni-based systems are made up of stand-alone modules, each with their own PLC controller and standardized software, plus ATS' SuperTrak linear conveyor, all managed by a master controller and HMI (left).

Under ATS, Symphoni has evolved beyond that initial CNC machining analogy. In its latest incarnation, the company says the technology has become a fully integrated digital automation system that orchestrates the operation of multiple modular stations to create, as its name implies, a "symphony of motion."

At the heart of the concept are what are referred to as "engines" – sub-systems composed of high-speed, tightly synchronized components. For example, a pick-and-place engine commonly includes a delta robot, a machine vision system and other automation components.

To coordinate these various elements at high speeds, Symphoni relies on Transformix's (now ATS') patented Rapid Speed Matching (RSM). According to Ken Nicholson, Staff Specialist – Symphoni Technology with ATS Innovation Center, RSM synchronizes the motion profiles of each component via electronic camming, .

"When I say a Symphoni system is electronically cammed, I mean everything," says Nicholson, one of Transformix Automation founders and a co-inventor of the RSM and Symphoni technologies. "When we're triggering a camera, for example, that's electronically cammed. So, if we know that it takes 17ms between triggering a camera and it taking the picture, we build that into the operating system so it compensates; it always takes the picture at the same position whether the system is running at 25 parts per minute or 360 per minute.

"We carry that throughout the entire system," he adds. "Every device – gripper fingers, pneumatic actuators, cameras and the servos – are all electronically cam driven and mapped out throughout the cycle. As a result, we can eliminate all those bits of wasted time because we know where everything is going to be. Everything is done in anticipation."

It's that ability to anticipate the position of each component, he says, that allows the system to match speeds between engine components and make precise hand-offs at full speed.

"At a module level, there is a 360-degree profile for every single device, including servo motors and other things like cameras," he says. "In each cycle, the master processor makes sure all of them, individually, are where they are supposed to be, so they come together like a symphony of motion. The devices are like individual musicians, following their own sheet music, but there is one conductor checking that each component is where it's supposed to be, every 800 microseconds."

According to ATS, electronic camming, plus a custom designed delta bot, allows Symphoni's pick-and-place engine, for example, to operate at up to 150 strokes per minute while carrying a common 2-up payload, thus yielding a potential output of 300 parts per minute.

However, Nicholson says it isn't so much about component speed as it is wringing out all the small inefficiencies during an operation which stack up to a significant time saving.

"I think the important thing about our RSM technology is that its profiles are targeted, meaning a Symphoni system goes like hell where it can and slows down where it has to" he adds. "The system isn't going crazy fast but it is being crazy efficient, so we're ultimately getting a lot more done in a set amount of time."

What's more, electronic camming isn't limited to the "engine" level of the system. Typically, one or more engines are combined to make up a module – in essence, a stand-alone machine with its own I/O, servo drives, Symphoni

OS control software and a PLC controller for each engine, housed within a standard one or two-meter-wide cabinet.

An entire Symphoni-based system is therefore composed of multiple modules, with their own specific assembly function, stacked closely together around a transport engine (aka ATS SuperTrak linear conveyor) to move the pallets from one station to the next.

> ***"When you look at the total cost of goods sold, there's nothing like Symphoni to reduce total cost of ownership."***

While each module is a complete machine itself, all the module PLCs report to and receive instructions from a system master controller, which shares the same standardized Symphoni OS to coordinate each module over a deterministic PowerLink network.

As a result, Nicholson says, Symphoni systems aren't just hyper-efficient but also designed to be reconfigured and re-deployed quickly.

"For example, we recently had a customer, with a Symphoni machine making an unrelated product, who wanted us to reconfigure the system to make COVID test kits," Nicholson says. "So, we pulled some modules out, plugged them in at a different location, changed the tooling and got it into service very quickly. In total, it took 14 weeks to design, order, install and test the new contact tooling."

In addition, he says that adding, removing or re-deploying modules of an existing system doesn't require a control engineer. In fact, most operator, MRO and engineering tasks can be carried out within the system's Symphoni OS via the HMI. For more in-depth programming, ATS provides the off-line Symphoni Config application.

"Through Symphoni Config, you can change servo profiles, pick positions and place positions and stuff like that, and then save it as a recipe," Nicholson says. "The system then rebuilds the cams in the background and now you're running something different."

Ultimately, Peng says Symphoni – due to its high speeds, scalability and configurability – is well suited for Canada's manufacturing sector, which has historically been risk adverse, cash strapped and therefore lagging behind globally in terms of automation.

"When you look at the total cost of goods sold, there's nothing like Symphoni to reduce total cost of ownership," she says. "In the early stages of product development, when production volume is low, manufacturers can invest in one or a few of our modules to do prototyping."

"As volume picks up, you can add automated feeders and more modules," she adds. "Before you know it, you have a complete line that runs 24/7 at high-speed, and can produce one or more products and adapts to new products in the future. Think of the savings in all that." **|DE atsautomation.com**

(Photo credit: StarFish Medical)

John Walmsley, StarFish Medical's Executive VP of Strategic Relationships, with the Winnipeg Ventilator 2.0 and the StarFish crew who helped design it.

Medical Design in the time of COVID

StarFish Medical pulls off near impossible design feat with development of the Winnipeg Ventilator 2.0. BY TREENA HEIN

Here's a Canadian engineering challenge appropriate for 2020: Design a ventilator that doesn't require parts from the medical device supply chain in a matter of months. Then, achieve full testing, verification and manufacturing of the ventilator design in roughly eight weeks. And of course, accomplish all of the above while under the local and global restrictions of a lethal pandemic.

Turns out that's no sweat for StarFish Medical, Canada's largest full-service medical device design company, based in Toronto and Victoria, BC and now entering its third decade in operation. In September, StarFish's Winnipeg Ventilator 2.0 received Health Canada COVID-19 Medical Device Authorization, after being selected for financial support by NGen Canada, a supercluster agency, that in March announced $50 million to support the development of medical solutions to fight Covid-19.

The design of Winnipeg Ventilator 2.0 is based on a prototype created by Dr. Magdy Younes at the University of Manitoba in Winnipeg about 25 years ago. At the time, that Winnipeg 1.0 design was licensed to a major manufacturer, which made tens of thousands of units and deployed them in hospital ICUs around the world during the 1990s and 2000s, and extensively during the SARS epidemic in 2003.

However, the design and manufacture of next-generation 2.0 version this year was not simply an update. StarFish engineers had to sidestep the unprecedented pressure on the medical device supply chain to design their ventilator with non-medical components they could find in Canada.

> ***StarFish engineers had to sidestep the global medical device supply chain to design a ventilator with non-medical components they could find in Canada.***

This colossal effort, with people working 12-hour days, seven days a week for months, has been undertaken by 106 StarFish employees and over 100 other people at key vendors like Dometic, Advanced Test Automation, Yorkville, Dorigo Systems, Powersonic Industries, EM Dynamics and Celestica. In the end, Dr. Younes tested the updated version of his ventilator and declared it "a masterpiece."

Components led design

Ventilators are all about precise airflow. Most ventilators use an impeller/turbine for overall flow, but the Winnipeg 2.0 design employs a "frictionless" piston design.

The piston is precision-machined so its diameter is a fraction of a millimeter smaller than the cylinder's diameter. This eliminates the need for a physical seal, reduces resistance to piston motion and makes it possible to obtain very high flow rates.

With that nailed down, the StarFish team then focused on the valves. The oxygen gas mixing system in a typical ventilator is controlled with a proportioning valve that provides continuous control, explains John Walmsley, StarFish Executive VP of Strategic Relationships.

"We used a solenoid valve, which is typically found in many types of process control and therefore widely available, but it's either open or closed," he says. "We needed to have our firmware control the valve timing so that, in the end, the same control of oxygen mixing is achieved."

"It was tricky, but the fact that we had complete control with the firmware enabled us to make rapid progress with making the firmware and the hardware work together."

Indeed, most other companies making new ventilators for COVID-19 used existing operating systems, but the StarFish team wrote its firmware from scratch in the C programming language so as to have total control and therefore total confidence in the machine's safety. This confidence needed to extend from very precise control of the supplied gas mixture to the capacity of the 2.0 design to precisely and reliably respond to each individual patient's changing needs.

"There are many pressure sensors, redundancies, alarms and so on in a ventilator," says Walmsley, "and we wanted to design the firmware architecture from the ground up so that we could control all this and know it would validate against the necessary standards."

This, again, all ties back to the solenoid valve. The valve first chosen by StarFish turned out to be too slow. It's lengthy feedback response time created too many challenges in the control algorithm. Walmsley says that while there were many ways of fixing the situation, to save significant time on the firmware end, the team chose a faster valve.

On the pressure sensor front, design team implemented a rapid search between a few contenders but, eventually, a sensor with timely availability was chosen. Looking at other parts, the control panel of the 2.0 version is produced by a music amplifier manufacturer and the piston pump comes from a manufacturer that commonly makes pumps for RVs and boats.

The pneumatics come from the industrial control and automotive sectors. In a few cases, StarFish found components that would work, but the suppliers were required to upgrade the quality to meet medical grade standards.

Miraculously, StarFish made their submission for regulatory approval in three months, a process that normally takes three years. Production started at Celestica in October and thousands of units are on the way. While the actual work on this project was unusual for StarFish, it's also been atypical in terms of conflicting emotions of the team members.

"In the summer, we weren't sure how much ventilators might be needed this fall and so it's been a little strange to work on a product that you actually hope won't be needed," Walmsley says. "But with the second wave, it looks like many ventilators will perhaps be needed, and to provide a machine that will helps save lives is very satisfying for everyone involved." **|DE**

www.starfishmedical.com

Treena Hein is a Pembroke, ON-based freelancer

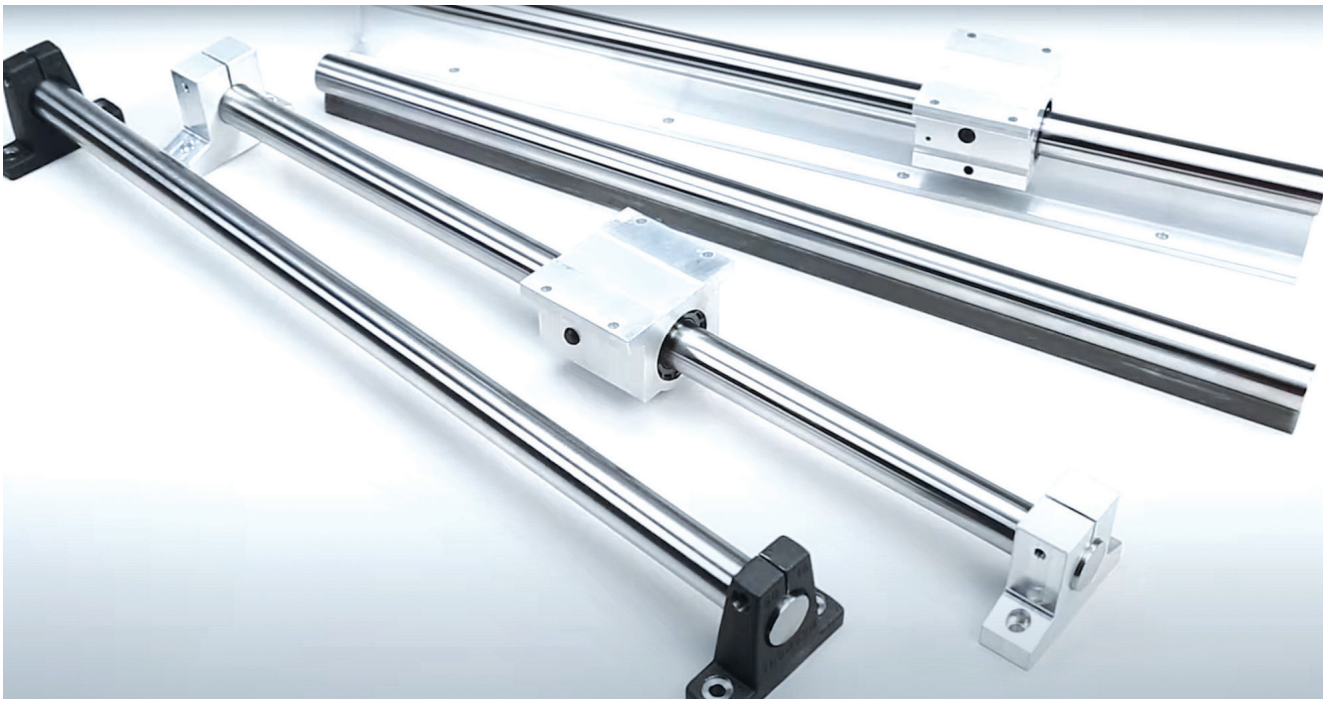

MAXIMIZING LINEAR MOTION ACCURACY AND DURABILITY

Informed round shaft selection is key in linear ball bearing applications. **BY CHARLES ISAAC**

When selecting a linear ball bearing for an application, motion designers often choose round rails over square rails to reduce costs in low-stress applications or when requiring a high tolerance for misalignment. Whether these designers achieve the intended benefit, however, depends on how carefully they select from among the many available round rail shafting options.

Round rails will, for example, vary in physical form factors such as hardness, straightness, surface finish, roundness and cylindricity. They also come in multiple grades of steel as well as aluminum, each of which might be coated with other materials.

While many designers may be tempted to use a less expensive shaft with inferior characteristics, the modest initial savings often result in a net loss, based on data showing decreased life of the overall assembly. Therefore, a basic understanding of key round shaft factors and how they influence precision and durability will help in selecting the ideal shaft for a design.

Physical Form Factors

Key shaft features that interact with one another to impact precision and durability include hardness, straightness, surface finish, roundness and cylindricity.

Shaft hardness affects the dynamic load rating of the bearing. Harder shaft surfaces better resist permanent deformation under single-point loading of bearing balls, thus maximizing the life of both the linear bearing and the rail itself. A common process for hardening linear shafts is "case hardening," in which the manufacturer adds a hard, wear-resistant outer layer by heat treating the shaft, while keeping the core "soft".

Figure 1 shows how the bearing load correction factor and consequently, life expectancy, must be adjusted downward as hardness drops below 60 HRC.

The depth of the case hardness is another factor in determining overall life. Higher loads subject the shaft to deeper bearing ball penetration and higher stress concentration. High deformation resistance in these situations then requires deep and uniform case hardness and must be engineered to linear ball bushing bearing size and load expectations.

Straightness is perhaps the most vital parameter for positioning accuracy in a linear ball bushing bearing system. Lack of straightness can cause binding, noise generation, premature wear and failure of the ball bearings. Best-in-class linear shafts are straight to within 0.001

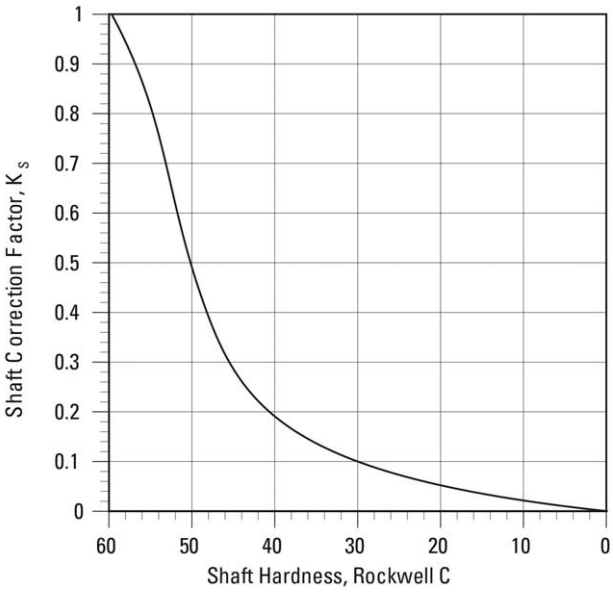

Figure 1: Shaft correction factor reduces dramatically as HRC hardness drops below 60.

inch per foot cumulative (0.002 inch TIR) and can accommodate special straightness requirements of 0.0005 inch per foot cumulative (0.001 inch TIR) for critical, high-accuracy applications.

Surface finish (or RA for roughness average) is a measure of how smooth or rough the shaft's surface is. It represents the average height of the microscopic peaks and valleys along the length of the surface of the shaft.

Superfinishing levels more of the peaks along the shaft's surface to produce a series of plateaus, thus increasing the percentage of shaft surface area that is available to the ball bearing. Surface finish is a key factor affecting linear ball bushing bearing travel life, load levels, frictional resistance and smoothness of travel.

Roundness is the tolerance that controls how closely a shaft cross-section matches a mathematically perfect circle. Shafts that are out of round by even 0.0001 inch create preloading on some of the ball tracks, causing uneven wear, premature failure and shortening bearing life by as much as 50%. High precision applications require a roundness tolerance of 0.000080 inch, which manufacturers achieve by a process known as centerless grinding, as shown in Figure 2.

Cylindricity is a measure of the degree of conformance of the shaft (or linear race of the linear ball bushing bearing) outside surface to a true cylinder. Taper is a cylindricity measure of the change in diameter any place along the length of the shaft.

For linear motion applications, look for shafts with a maximum taper of half the diameter tolerance over the length of the shaft. This ensures uniform distribution of bearing loads and maximizes bearing travel life.

Material Matters

The most common materials used in shafts are carbon steel, 52100 tubular carbon steel, 440C stainless steel, 300 series stainless steel and aluminum. Each has unique capabilities, and it is critical to match each to the application.

Carbon steel is the most commonly applied shafting material for linear motion applications, representing more than 85% of all shafting sold. It is the least expensive and, when processed, results in the hardest and deepest case, as well as high yield and tensile strength. It is highly versatile and has multiple plating options that add corrosion and wear resistance.

The most common grades of carbon steel available in North America include 1050, 1055, 1060 and 1566. These follow the AISI/SAE numbering systems, in which the first digit indicates the type of steel, the second digit is for special alloys that may be added, and the last two digits represent the percentage of carbon in the material. The percentage of carbon is the biggest differentiator among shafting materials and determines the maximum hardness achievable.

For maximum performance in most linear applications, look for carbon steel material with a carbon content greater than 0.60% and manganese content greater than 0.05%, which allows for the hardest and most uniform Rockwell hardness values and case depths. When corrosion resistance is required, an optional plating, such as chrome, can be applied.

440C stainless steel is a popular material for industrial automation due to its corrosion resistance and hardenability. As shown in Figure 1, 440C's typical hardness range of 50 to 55 HRC would reduce shaft life by 20 to 50% compared to carbon steel. A chrome-plated carbon steel shaft will offer better life if corrosion resistance is needed.

Designers needing non-magnetic materials often choose 300 series, but this is not suitable for use with linear ball bushing bearings because they do not offer any hardenability. 303 stainless does have a high sulfur content, which gives high machineability but reduces corrosion resistance and toughness.

There is a 304 grade which does have exceptional corrosion resistance to chemical and atmospheric conditions, but it is less machinable than 303 and 316 grade. The 316 offers even less machineability than either 303

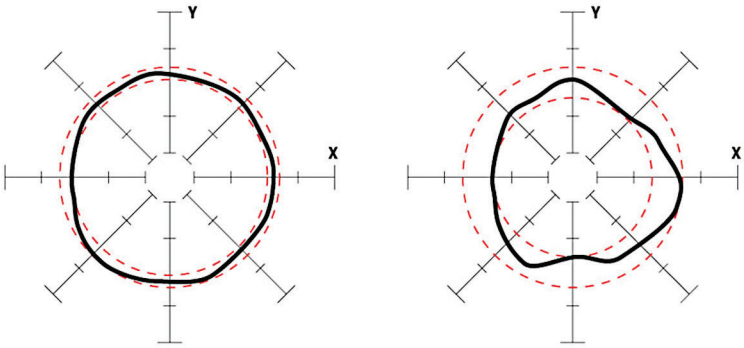

Figure 2. These two plots of shafts illustrate different roundness tolerances. On the left, a proprietary centerless grinding process produces shafts with a roundness tolerance of 0.000080 inch.

Images courtesy of Thomson Industries, Inc.

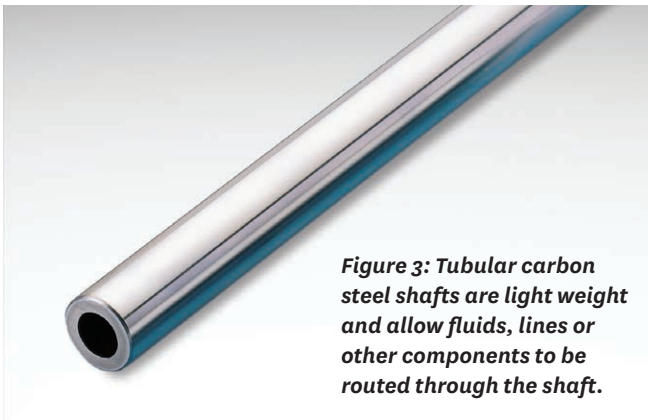

Figure 3: Tubular carbon steel shafts are light weight and allow fluids, lines or other components to be routed through the shaft.

and 304 series but provides more corrosion resistance than both.

Motion system designers often choose 52100 tubular carbon steel when they want a lighter weight shaft or prefer to route fluids, lines or other components through the shaft (Figure 3).

The tubular design reduces weight by 29 to 56%. It is bearing-grade chromium steel with a carbon content that allows for good hardenability with hardness values in the range of 58 to 62 HRC.

Aluminum shafting is usually offered with either a ceramic or hard-anodized coating. The coating hardness is nominal at the surface level only. The "soft" underlying shaft would deform at high point loading of a linear ball bushing bearing.

The benefit, however, is a significant weight reduction compared to other shafting materials, while also offering good corrosion resistance. When "soft" shafting is used, plain bushings that do not contain ball bearings are selected to prevent damage to the shaft, while still providing linear motion.

Configuration Basics

How the shaft and bearing are configured will also impact accuracy and durability. These include the ratio of the stroke length to bearing length, the number of shafts used, the number of bearings used and the aspect ratio between the parallel shafts and bearings.

In most applications, the shaft receives less stress than the bearing plate because motion is spread across a long distance and will outlive the bearing. When the shaft stroke is less than twice the bearing length, the situation reverses. Higher stress cycles accumulate on the shaft rather than the bearing plate, limiting its lifecycle.

Although the application will dictate the stroke parameters, the designer should include a short-stroke lifecycle correction factor when setting the dynamic load rating (D-rating) during design.

Two shafts are always necessary because a round bearing can't account for moment loads. This does, make installation more difficult because parallelism between each shaft must be within 0.001 inch over the system's entire length.

Likewise, there should be two bearings per rail to achieve equal load. This also allows the designer to take advantage of a half-degree self-alignment feature that is available in certain round rail bearings. Installing more than two bearings would not be prudent, however, because equal load sharing and alignment would be difficult to achieve.

The maximum aspect ratio between the parallel shafts and related bearings should be 3:1. As shown in Figure 4, spreading the bearings on the shaft at 1/3 the distance between the parallel shafts is recommended.

Having an informed understanding of the factors that impact precision and durability will help designers make the optimal shafting choices for their applications. Knowing the characteristics of the production process, materials and configuration options will make it easier to sort through the advantages and limitations of available options. **|DE**

www.thomsonlinear.com

Charles Isaac is the product line manager for linear bearings and guides at Thomson Industries, Inc.

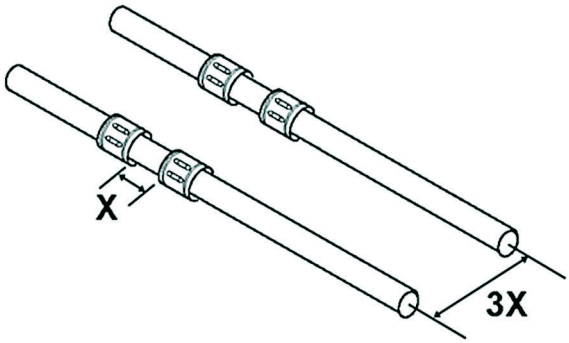

Figure 4: Spread between multiple bearings should be 1/3 the distance between parallel shafts.

AUTOMATION

INDUSTRIAL ROUTERS

Red Lion has launched its Secure Remote Access Platform that centralizes the management of routers. The remote access routers offer Simply.Connect technology that, according to the company, enables the setup of routers in under two minutes using only a smartphone.

The platform is based on RLConnect24, a remote service portal that provides a centralized site to monitor and manage deployed assets and users. RLConnect24 also offers data visualization, geographic mapping, data logging, and alarms based on operational or system-generated data.

The RLDialUp client software lets operators securely connect their PC to remote assets for maintenance and configuration. The routers are industrial-grade gateways that offer optional LAN, WAN, serial, USB, Wi-Fi or 4G LTE connectivity.

Red Lion also launched its RA10 industrial firewall, which can learn and self-configure to help secure older assets, avoid address conflicts and/or logically isolate machines or groups of machines.

www.redlion.net

ETHERCAT TERMINALS

Beckhoff Automation introduced its EL51xx line of EtherCAT terminals with built-in incremental signal

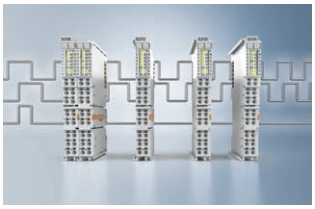

analysis for 5V incremental encoders via RS422, TTL signals or open collector interfaces. Available in four models, the terminals acquire incremental signals with frequencies up to 5 MHz and feature many parameterization options. Each terminal offers an integrated sensor supply, which is parameterizable to 5, 12 or 24V. Additional integrated functions include rotary axis functionality, workpiece measurement and standstill monitoring. The measurement of period, frequency and speed with a resolution of 10ns is also available. In addition, the terminals implement a duty cycle measurement of the incoming signal.

www.beckhoff.com

MOTION CONTROLLER

ACS Motion Control launched its ECMsm, a compact 2- or 4-axis

motion controller with internal drives. The first product in the company's Economical Control Module line, the controller provides up to 5/10A per axis with 12-48VDC drive supply. The ECMsm features a multi-processor architecture and universal servo drive technology to integrate and control most types of motors and stages.

Other features include ACSPL+ real-time programming with up to 6 simultaneous threads and comprehensive host programming libraries. The controller's interface is compatible with multiple motor types on each axis including brushless, brush, voice coil or stepper motors. In addition, the controller integrates Safe Torque Off (STO), SS1 functional safety capabilities.

www.acsmotioncontrol.com

MOTION CONTROL

MOTION CONTROLLERS

Emerson released its latest PACMotion servo motion control portfolio that includes a motion controller, servo motors, servo drives and motion configuration software. The PACMotion PMM345 motion controller connects directly

into the PACSystems RX3i programmable logic controller backplane with synchronized motion for up to 40 coordinated axes.

The controller operates exclusively with PACSystems RX3i controllers. It also enables the company's on-the-fly electronic reconfiguration which lets users implement rapid changeovers without stopping production.

www.emerson.com

SERVO MOTOR

JVL unveiled its MAC1500 AC servo motor with

built-in controller, Nano-PLC and direct AC mains supply. With a length of 182mm, the 1500W motor provides a torque of 4.78/14.3 Nm at 3000rpm. Powering the motor requires connection of the main voltage of 3x400VAC through the M23 connectors. Control voltage for the encoder and microprocessor circuitry is 24VDC.

In an emergency-stop situation, encoder position and other values are maintained by this control voltage. The integrated MAC1500 motor doesn't require a separate servo driver or controller in a control cabinet. In addition, the motor and controller can be replaced as a single integrated unit.

www.electromate.com

STEPPER MOTOR CONTROLLER

Optimal Engineering Systems, Inc. (OES) has introduced its ICAD Series of integrated motion controllers and drivers for 2-phase stepper motors. Available as 1-, 2-, 3- and

4-axes modules, they are designed for NEMA 8 to NEMA 42 stepper motors. These 6- by 8-inch, integrated controllers incorporate high resolution micro-stepping drivers for precise positioning.

Other features include home and limit switches per axis, joystick interface, TTL/CMOS inputs and outputs, quadrature encoder feedback and USB. Optional Ethernet interfaces permit each module to be customized for specific applications. The ICAD series is powered from a single power supply up to +48VDC. The high voltage power supply allows for high speed operation.

www.oesincorp.com

FLUID POWER

VALVE TERMINAL

Festo unveiled its VTSA-F-CB, a valve terminal with serial communications added to the VTSA line's existing parallel communications. In addition, the terminal's internal bus system allows users to actuate up to 96 valve addresses, in four zones, on one valve terminal and one fieldbus node. The VTSA-F-CB, supports mixing 18mm and 26mm valves on the same manifold.

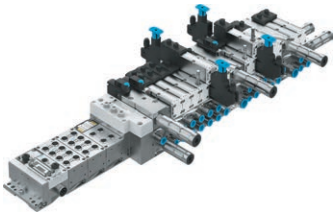

The terminal also features four different CPX/pneumatic interfaces: A basic interface when safety control is not required, two integrated PROFIsafe versions (one to control three safe valve zones, another to control two zones with one safe output). The last version makes it possible for an external safety fieldbus module to directly control three pneumatic safety zones. Configuration options include a pilot air switching valve and a safety soft start/quick exhaust valve for slow start-up. And the new vacuum generator VTSA-F-CB has an air saving feature with ejector pulse.

www.festo.com

DIVIDER-COMBINER VALVE

Webtec unveiled its FDC140, a high-accuracy hydraulic flow divider-combiner valve. Designed to drive two cylinders or motors in close unison, the spool valve offers a flow capacity of 140lpm (37gpm).

FDC140 valves can divide a single flow into two separate flows. These will always be in the same ratio to one another regardless of any pressure differential (unequal load). The FDC140 delivers accuracy of ±1.5%. A single flow can also be divided into two unequal flows, with split ratios extending from 10-90% (in 10% increments). Another

feature of the three-port FDC140 is its maximum working pressure, rated at 350bar (5000 psi). Featuring an SG iron body, steel components and NBR seals, it can be used with HLP mineral and synthetic oils, as well as HFC fire-retardant fluids. Operating fluid temperatures extend from -30 to +100°C (-22 to +212°F).

www.webtec.com

ACTUATORS

ELECTRIC CYLINDER

Festo has added the EPCE electric cylinder to its Simplified Motion Series (SMS). The actuators in the series integrate a servo drive, controller, electronics and two on-board control options as standard: Digital I/O and IO-Link. The EPCE line offers a number of variants, based on the location and number of piston rod(s), left or right, front or rear, etc. Units with 1-4 piston rods are available, and there are through-piston rod as well as dual opposite-direction piston rod variants. All parameters are set manually on the device. Extended functions are possible with IO-Link.

www.festo.com

LINEAR VOICE COIL ACTUATOR

Moticont has added the LVCM-016-010-01 linear DC motor to its linear voice coil actuator line. At 0.625 inch (15.9mm) in diameter and a length of 0.63 inch (15.9mm) at mid-stroke, the actuator has a continuous force of 5.9oz (1.6N) and a peak force of 18.6oz (5.2N), and features a 0.125 inch (3.2mm) stroke. Each end of linear actuator has two 2-56 UNC-2B threaded mounting holes in the housing and two 2-56 UNC-2B threaded mounting holes in the coil end on 0.250 inch (6.35mm) centers. A plug-and-play system including an encoder and servo controller is also available.

http://moticont.com

BRUSHLESS DC MOTOR

Portescap released its 16 ECP, the latest addition to the company's Ultra EC mini brushless DC motor. With an integrated driver, the 16mm diameter motor versions are available in 2 lengths: 36mm and 52mm. The integration of the driver inside the motor reduces many of the complexities associated with operation including installation time, application footprint and wire clutter. The integrated motor drive solutions are a good fit for applications such as respiratory and ventilation devices, miniature pumps and medical hand tools.

www.portescap.com

SENSORS

3D PROFILE SENSORS

Teledyne Imaging released the Z-Trak2, its latest family of 3D profile sensors that provide high-resolution, real-time height measurements using laser triangulation. The 5GigE sensor series delivers scan speeds up to 45,000 profiles per second and features built-in HDR and reflection compensation algorithms. Z-Trak models handle object widths from 8.5mm to 1520mm and height range of 10mm to 1000mm. The S-2K and V-2K series feature scanning speeds of 45,000 profiles/sec and 10,000 profiles/sec respectively. Offering 2,000 points per profile, all Z-Trak2 models are factory calibrated and are offered with either blue or red eye safe lasers to suit various surface properties and operating environments. All sensors are housed in IP67 enclosures and come bundled with Teledyne Imaging's point-and-click Sherlock 8 software.

www.teledynedalsa.com

SENSORS AND TRANSMITTER PROBES

The AutomationDirect now offers RTD versions of its M12 connection transmitters, as well as RTDs without process connection and sanitary 3-A versions. The ProSense Pt100 RTD sensors and transmitters with sanitary connection probes offer a clean-in-place triclamp process connection. Temperature measuring for the probes ranges from -58 to 400°F. ProSense XTP series add temperature electronics to the Pt100 or Pt1000 RTD line in a stainless-steel body. Available in three preconfigured measuring ranges, XTP series transmitters are ready to use out-of-the-box or use the XT-SOFT software to program transmitters with a custom measuring range.

www.automationdirect.com

LINEAR TRANSDUCERS

Balluff has unveiled a fail-safe magnetostrictive linear position sensors with digital interfaces and up to three independent measuring systems. Available in four form factors, each of the rod-style transducers has either two or three separate sets of electronics and sensing elements operating concurrently in a single housing. Each linear transducer version is available with either an SSI or Start/Stop digital interface.

The digital sensors deliver up to 1000 Hz sampling frequency, are pressure rated to 600 bar and resolution down to 0.5µm. The IP67-rated sensors feature redundant position measurement and selectable output signals via software.

www.balluff.com

LINEAR POSITION SENSOR

Alliance Sensors introduced its GHS-19 series of spring-loaded LVIT gaging sensors. The contactless devices have a 0.75-inch (19mm) diameter aluminum or stainless steel body with a 1/2-20 UNF-2A threaded nose 1.5 inches (38mm) long and two 0.75 inch (19mm) hex jam nuts.

The sensors' 0.25-inch diameter probes are equipped with a No. 9 contact tip, producing a maximum tip force of 1 pound (0.45kgf). Offered with a PT02-10-6P, the sensor operates from a variety of DC voltages and are available with one of four analog outputs. They all include ASG's SenSet field calibration feature.

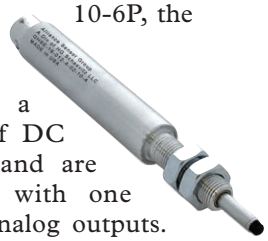

NEW FOR 2021

DEX MRO EXPO EXPO

FEBRUARY 18, 2021

For years, our DEX/MRO road show has moved across Canada showcasing the latest products and services to our audience of mechanical engineers and maintenance professionals.

Guess what? We can still do that online! This virtual event keeps it simple, just like our live shows.

WHO WILL ATTEND?

- ✓ Mechanical engineers
- ✓ MRO professionals
- ✓ Machine designers
- ✓ Plant, production & ops managers
- ✓ System integrators
- ✓ Safety and purchasing

REACH THESE INDUSTRIES

- ✓ Automotive
- ✓ Food processing
- ✓ Plastics
- ✓ Chemical processing
- ✓ Mining
- ✓ Oil and gas
- ✓ Utilities
- ✓ Aerospace
- ✓ Fabricators _ and more!

SECURE YOUR SPOT

Paul Burton, Senior Publisher
pburton@annexbusinessmedia.com
416-997-0377

MiSUMi®

Configured to Save Time™

CONFIGURE YOUR PART

THE WAY YOU NEED IT

STEP 1
Configure your part

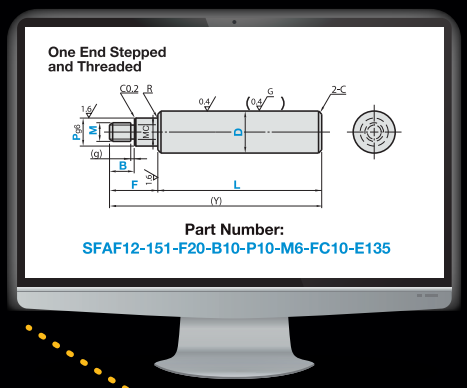

STEP 2
Download the CAD model

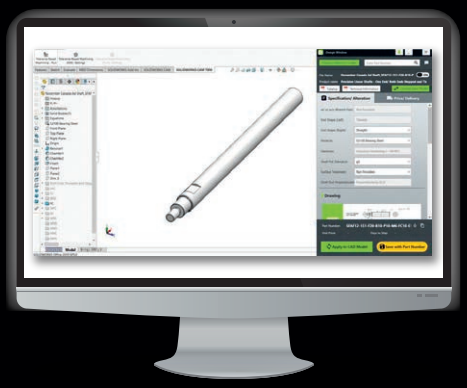

STEP 3
Add to your cart

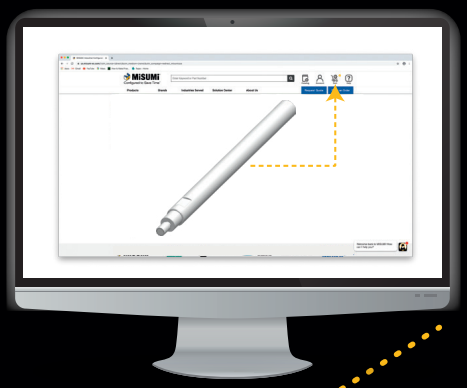

COMPLETE

Part Number: SFAF12-151-F20-B10-P10-M6-FC10-E135

MISUMI is known globally for configurable factory automation components, which enables the engineer to specify components through various design parameters. Select your specifications from a variety of shapes, surface treatment, material, length and diameter.

The configurable component offers the best of both worlds as it combines the reliability, price and lead times of a stocked component with the design flexibilities of a custom component.

Want to get started?
MISUMI.INFO/Canada